XEROX
820/820-II PROCESSOR
SERVICE MANUAL

600P84592

MAY, 1982

Prepared by:
Xerox Corporation
Office Products Division
Customer Service
Field Engineering
1341 W. Mockingbird Lane
Dallas, Texas 75247

TABLE OF CONTENTS

GENERAL DATA

1.1 HOW TO USE THIS MANUAL

The XEROX 820/820-II IP Processor MANUAL contains the necessary information for service and maintenance.

The Service Manual is divided into the following Chapters:

Chapter 1. GENERAL DATA

Contains information on the use of the service manual, general specifications, change tag information, and supplemental tools and supplies list.

Chapter 2. INSTALLATION

Contains information required for machine installation.

Chapter 3. REPAIR

Contains removal, replacement, and adjustment procedures which are indexed by number to the related parts list in Chapter 4 (Parts Identification).

Chapter 4. PARTS IDENTIFICATION:

Provides exploded views of all spared parts (and their configuration) which are indexed to the item number and description of the spared parts list. The following codes are provided in Parts Identification to show that a Removal/Replacement, Adjustment, or a Removal/Replacement and Adjustment procedure is provided in the Repair information.

6	Remove/Replace
7	Adjustment
8	Remove/Replace and Adjustment.

The number in the box is the number of the repair procedure.

Chapter 5. DISPLAY QUALITY

NA

Chapter 6. TROUBLESHOOTING

Provides the troubleshooting approach which begins by viewing all visual indicators in their normal sequence of operation. The first incorrect visual indicator will provide access to a fault isolation/repair procedure.

MANUAL REVISION MARKS

Revision pages for the Service Manual tell of configuration modifications. When a page is changed or added, a revision letter on the bottom of the page will identify it as a revised page. The actual change will be identified as follows:

Text	Black vertical bar in the left, margin.
Tables	Black vertical bar left of changed data.
Changed Illustration	Black vertical bar to area changed.
New Illustrations	Black vertical bar to art number.

If the same page is changed by a later revision, the identification marks will be removed and identification marks added to the new information.

A new title page with a revision Control List will be with each Change Package. This list will contain the number of each changed or added page as well a revision letter of that page. Pages not listed are or or previous revision pages.

BASIC SIGNS USED IN THIS MANUAL

Four signs are used to show areas or sections i Service Manual which have been affected by a tag ch

22	This sign is used to show a particular part area of a figure which has been modified b the tag number within the circle.
222	This sign is used to show a particular part area of a figure which has not been modi by the tag number within the circle.
99	This sign is used to show a tag change has modified an area of the machine.
5	This sign is used to show a tag change has modified an area of the machine.

COMMENT SHEET USAGE

You can help improve the Service Manual by iden errors, providing input for improvements, and statin reasons. A publication comment sheet is located rear of this manual. It contains instructio completion. An answer will be sent to you upon req

1.2 SPECIFICATIONS

Product Codes	U S
820 Processor	927
820-II Processor (Floppy)	U03
820-II Processor (Fixed)	U05
Keyboard Unit	928
Disc Drive Assembly (5.25" SS)	929
Disc Drive Assembly (8" SS)	973
Disc Drive Assembly (Fixed)	U07
Disc Drive Assembly (5.25" DS)	T66
Disc Drive Assembly (8" DS)	F10

Dimensions

Display/Controller

Width	(15.0")	(38.1cm)
Depth	(13.5")	(34.3cm)
Height	(13")	(33.0cm)
Weight	(30 lbs)	(13.6Kg)

Keyboard Unit

Width	(20.0")	(50.8cm)
Depth	(9.5")	(24.1cm)
Height	(3.75")	(9.5cm)
Weight	(10 lbs)	(4.5Kg)

1.2 SPECIFICATIONS

Disk Assembly 5.25"

Width	8.0"	(20.3cm)
Depth	9.0"	(22.8cm)
Height	6.7"	(17.0cm)
Weight	10 lbs	(4.5Kg)

Disk Assembly 8"

Width	13.0"	(33.0cm)
Depth	22.75"	(57.8cm)
Height	11.25"	(28.6cm)
Weight	48 lbs	(21.8Kg)

Fixed Drive Assembly (8")

Width	15.5"	(39.4 cm)
Depth	22.75"	(57.8 cm)
Height	11.25"	(28.6 cm)
Weight	54lbs.	(24.5 kg)

Space Requirements

The minimum space requirements around the machine as shown (Figure 1-1) are needed for both normal operator functions and service maintenance functions.

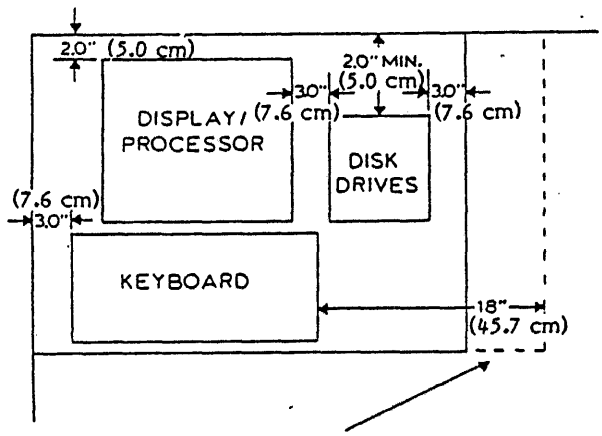

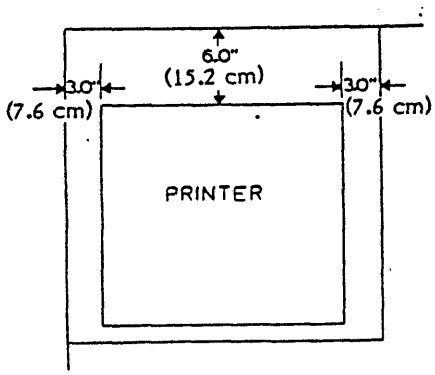

Figure 1-1 Space Requirements

Electrical Voltage

	U.S.	R.X.
Normal	115VAC	220V-240V
Minimum	90VAC	193V-215V
Maximum	132VAC	242V-264V
	60HZ±0.5HZ	50HZ ± 0.5HZ

A standard two pole, three wire grounded recepta required.

Environmental

Temperature 50°to 90°F (10° to 32°C)

Humidity 15% to 85% at 78°F (25°C) (NON CO

Elevation 6,000 feet above sea level. (1800 Meter

1.3 CALL MANAGEMENT

1.3.1 General

The Call Management procedure is to be performed every service call. Call Management will ensure th critical areas of the 820 are in specification and tional. Performance of Call Management will enab level of service targets to be met, assuming a r territory alignment.

The materials listed in Table 1-1 are required to pe the Call Management procedure.

Table 1-1 Call Management

Materials		Part No. (USO)	(RX
Head Load Pad	5.25"	601S868	76S2
Head Load Pad	8"	601S547	3P8
Anti-Static Cleaner		601S747	600T9
Film Remover		8R90020	8R9
Drum Polishing Paper		43P46	4
Clean-Ups (Box of 50)		43P67	4
Cleaning Solvent		43P78	600T9
Oil Lo-17		70H23	600T9
Paper Towel Packet			8K9
Lint Free Cloth		35P2163	35F
Wax Wiping Cloth		35P1638	35F
Cleaning Kit (51/4)		73P80439	73P8
Cleaning Kit (8")		73P80400	73P8
Cleaning Solution		43P80006	43P8

The Call Management steps are presented in a that will avoid backtracking and repeat operations.

Remember, when performing a Call Manag ment, in the customer's office. Try not to interrupt the office operation. Keep your work area clean and as possible; do not scatter tools and parts around. of solvent-soaked towels in proper receptacle.

The information in this manual is applicable to all machines which have not been modified beyond the standard indicated by the modification plates. Refer to the appropriate modification leaflets for additional information when a machine has been modified to a later standard.

RX machines use a 10 digit serial number system in which the digits underscored designate the sequential change in number.

111 - XXXXXXX 820 Display Processor (E 39)

NOTE: **All machines manufactured after January 1, 1982 will have 131-XXXXXXX.**

1.5.3 Matrix Tag

The matrix tag for the 820/820-II Processor is located on the top of the CRT support. Any retrofit made to the machine must be marked on the matrix tag. The matrix tag for the disk drive assembly and the keyboard assembly are located on the bottom cover of that particular assembly.

CHANGE TAG INDEX

PROCESSOR

TAG #	DISCRIPTION	CUT IN
1	2.0 Rom Level CPU PWA	
2	Etch 2 Level CPU PWA (RXO)	131-303-

8" DISK DRIVE BOX

TAG #	DISCRIPTION
1	Universal AC Harness (RXO)

1.3.2 CALL MANAGEMENT PROCEDURE

Items marked with an asterisk (*) are to be performed only once within a 6-month period.

Paragraph references in the following steps are to procedures in Chapter 3.

A Call Management checklist follows the Call Management procedure.

XEROX 820/820-II Processor

1. Check connector panel and ensure connectors are properly secured.
2. Check display (CRT) alignment (3.1.2).
3. Turn system power OFF.
4. Remove top cover (3.1.1).
5. Clean face of CRT with general purpose cleaner and antistatic cleaner (601S747).

*6. Clean back of CRT with wax wiping cloth.

NOTE: Do not remove PWA unless necessary.

7. Brush/clean PWA.
8. Ensure connectors are properly seated.
9. Replace head load pads if necessary (3.3.3/3.4.3).
10. Install top cover (3.1.1).
11. Turn system power ON.
12. Perform disc head cleaning procedure provided on the head cleaning kit package.
13. Run Diagnostics
14. Operate system to ensure proper operation.
15. Perform printer (terminal) periodic maintenance (1700 series Communications Terminal Service Manual).
16. Complete machine records.

CALL MANAGEMENT CHECKLIST

1. Ensure connectors on connector panel are secure.
2. Check display (CRT) alignment.
3. Remove top cover.
4. Clean face of CRT.
5. Clean back of CRT.
6. Clean PWA.
7. Check connectors.
8. Check load pads.
9. Install top cover.
10. Operate system.
11. Perform printer maintenance.
12. Complete machine records.

1.4 SUPPLEMENTAL TOOLS AND SUPPLIES

Supplemental tools are in addition to the 850/860 I Hire Tool Kit (600T1391) and the 1700 Terminal Se Supplemental Tools. The tools listed in Table 1-1 required to service the XEROX 820/820-II Se Processor.

Table 1-1 Supplemental Tools

600T1504	Loop Back Tool
73SXXXX	Diagnostic Disc
600P83475	P-1/1730/630 Service M

Table 1-2 is a list of miscellaneous supplies.

Table 1-2 Consummables

12P422	TY Wrap
99P3049	Fuse, 2.5A (USO)
708W1601	Fuse, 2.0 AMP (RX
708W9501	Fuse, 1.25A (RXC
708W5001	Fuse, 4.0 AMP (R>

1.5 CHANGE TAG INDEX

1.5.1 Introduction (USO)

All significant changes to the machine, whic installed in the factory or in the field, are ider by a tag number and a priority letter. The: listed in the Change Tag Index. The priority change is designated as follows:

M - mandatory

O - optional

N - not for field retrofit

Also shown is the description of the change, kit associated with the change, and a list of serial num machines affected by the change. The type n configuration affected by the change is identified product code preceding the serial number.

1.5.2 Introduction (RX)

All significant changes to the machine, whic installed in the factory or in the field, are ider by a tag number and a priority letter. The: listed in the Change Tag Index. The priority change is designated as follows:

Class 1	Modifications must be made field immediat parts are available.
Class 2	Modifications m the field, retr on all machin next service call
Class 3	Repair by repla modifications.
Class 4	Modifications porated at discr local manageme customer's requ
Class 5	Production only

1.6 REFERENCE LIST OF TECHNICAL PUBLICATIONS FOR 820/820-II

	MANUAL NAME	VENDOR PART #
1.	820 Training Manual (Xerox Corp)	600P84430
2.	630 Printer OEM Manual (Diablo Systems)	90443-00
3.	630 Printer Service Manual (Xerox Corp)	600P83475
4.	Motorola Monitor Service Manual VP41 (Motorola Corp.)	68P25253A89-0
5.	Ball Monitor Service Manual (Ball Bros.)	5-017-1045
6.	Shugart Disk Controller 1403D OEM Manual (Shugart)	039022-1
7.	Shugart SA1000 Disk Service Manual (Shugart)	039011-0
8.	Shugart SA850 Disk Service Manual (Shugart)	039018-1
9.	Shugart SA800 Disk Service Manual (Shugart)	039025-1
10.	Mostek Z80 MicroComputer Data Book (Mostek Corp)	MK79602
11.	Zilog Z80 Microcomputer Components Data Book	00-2034-01
12.	Zilog Z80 Microcomputer Components Data Book Document Change Notice	E0-2034-01

NOTE: Xerox Corp. only supplies Xerox Publications (600P). All other publications will have to be ordered from the vendors listed above.

INSTALLATION

2.1 PREINSTALL CHECKOUT

1. Check the equipment for damage

NOTE: If the following condition(s) is not corrected, tell your supervisor in writing of the problem.

2. Check the space requirements (Chapter 1, Section 1.2).

WARNING

DO NOT try to correct wiring. If the following voltage(s) is not within specification, tell customer not to connect machine to outlet and have a licensed electrician correct wiring.

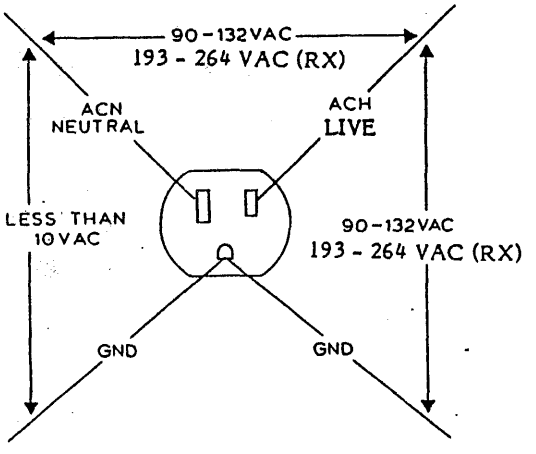

(Figure 2-2)

3. Check the AC Power at outlet (Figure 2-2).

4. Check contents of installation kit.

2.2 UNPACK MACHINE

1. Remove all external packing tape and materials.

2.3 SET UP

1. Ensure power switch is off.

2. Connect keyboard to display/processor.

3. Connect disk drives to display/processor.

WARNING

DO NOT ATTEMPT TO APPLY POWER TO FIXED DRIVE BOX YET: severe damage to the hard disk drive will result.

FIXED DRIVE

1. Remove (2) screws at rear of drive assembly.

NOTE: The long screw in the left side of the box, facing rear, makes the interlock switch when screwed in. When replacing be sure to put it in the left side, facing the rear of the box.

2. Slide top cover to rear, then lift cover off.(Fig. 2-1)

3. With the top cover removed the two disk drives should now be exposed. The fixed drive is the outermost with the floppy drive between it and the Power Supply. As you stand facing the left-hand side of the unit (outer case of hard disk), note the circular aperture in the hard disk's cage, exposing an aluminum spindle hub (Figure 2-1). A fingered flange is inserted into a hole in this spindle hub. The fingered flange is a shipping restraint, called a spindle lock, which MUST be removed before power is applied to unit.

WARNING

After removal of the spindle lock (step 5), be extremel careful when attempting to move the system. The fixe disk drive is extremely delicate and can be severl damaged if bumped or jolted. ALWAYS replace th spindle lock if you are going to move the system mor than a few feet. After removal of spindle lock, th spindle hub may be manually rotated, but ONLY in th CLOCKWISE direction. The read/write heads have slight chamfer, and counterclockwise motion could caus them to gouge the media.

4. Verify correct Jumper and Switch settings on Fixed Controller PWA, on 10 MB Controller PWA, and on Floppy Controller PWA. (See Repair Data Fixed Disk Assembly Adjustments 3.5.8.)

5. Unscrew and remove the spindle lock. Invert it so the protruding finger faces outwards towards you, then screw it in this position (finger facing out) to the disk drive case in order not to lose it.(Fig. 2-1)

6. When you have inverted the spindle lock, walk around behind the unit again. A white translucent jack (Figure 2-1) mounted in a metal standoff will be visible from the rear of the Winchester disk drive. This is a AC cable jack. A plug which obviously mates to this jack should also be visible at the end of a cable running from the rear of the floppy disk drive. Press the plug into the Winchester drive jack, making certain they are securely mated.(Fig. 2-1)

7. Remove the cardboard shipping insert from within the floppy disk drive. It has been inserted between the heads to protect them during shipment.

8. Make certain that there is a Winchester media error map printout within the plastic pouch attached to the disk drive bubble. This information is very important; it will be used as backup hardcopy in event the flaw map information already on the disk is inadvertently destroyed.

9. Replace the top cover Do the reverse of removing the top cover, (Fig. 2-1). The long interlock screw should be placed in the left hand hole of the top cover when viewed from the rear.

10. Connect power cord(s) to AC outlet.

NOTE: There is an AC outlet at the rear of the 8' and Fixed Disk Drives that is live when power or switch on the drives is turned on. The printer or processor can be plugged into it.

11. Verify system operation by running system diag.(chapter 6)

8" Floppy Disk Drive

1. Remove Top Disk Cover.
2. Verify correct Jumper settings on the Floppy Controller PWA. (See Repair Data 8" Disk Drives 3.4.2.)
3. Replace Top Disk Cover.
4. Remove the cardboard shipping insert from within the drive. It has been inserted between the heads to protect them during shipment.
5. Connect power cord(s) to AC outlet.
6. Verify system operation by running system diag.(chapter 6)

NOTE: There is an AC outlet at the rear of the 8" drives that is live when the power on switch on the drives is turned on. The printer or processor can be plugged into it.

Printer

1. Connect Signal Cable to Processor.
2. Select Baud Rate for 1200.

NOTE: If installing 630 printer, use P-1/1730/630 Printer Service Manual, and set switches on HPRO5 PWA as shown in fig. 2-3.

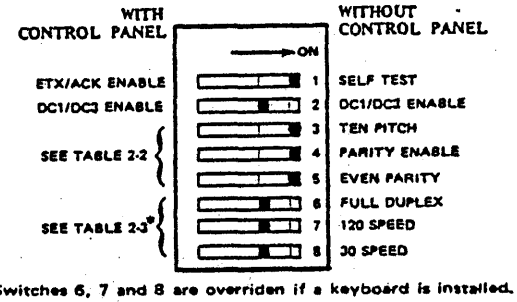

*Switches 6, 7 and 8 are overriden if a keyboard is installed.

Table 2-2
OPTIONAL BAUD RATE SELECT

SWITCH 3	4	5	BAUD
OFF	OFF	OFF	150
ON	OFF	OFF	600
OFF	ON	OFF	1800
ON	ON	OFF	2000
OFF	OFF	ON	2400
ON	OFF	ON	4800
OFF	ON	ON	7200
ON	ON	ON	9600

Table 2-3
LANGUAGE SELECT

SWITCH 6	7	8	PRINT WHEEL SELECT
OFF	OFF	OFF	DEFAULT TWP
ON	OFF	OFF	TWP
OFF	ON	OFF	LOGICAL BIT PAIRED
ON	ON	OFF	APL
OFF	OFF	ON	FRENCH AZERTY
ON	OFF	ON	GERMAN
OFF	ON	ON	SCANDINAVIAN
ON	ON	ON	NORSK

(Figure 2-3) 1730/630 HPRO5 Control Switch Functions

3. Connect power cord to AC outlet.

2.4 INSTALLTION CHECK LIST

1. PREINSTALL CHECKOUT

____ Shipping damage.

____ Space requirements.

____ AC power at outlet.

____ Installation Kit contents.

2. UNPACK MACHINE

____ Remove tape and materials.

3. SET UP

____ Power OFF.

____ Connect keyboard.

____ Connect disk drives.

____ Connect power cord(s).

____ Install printer.

4. OPERATIONAL/SYSTEM CHECK

____ Perform the Level 1 Checkc Procedure (Chapter 6).

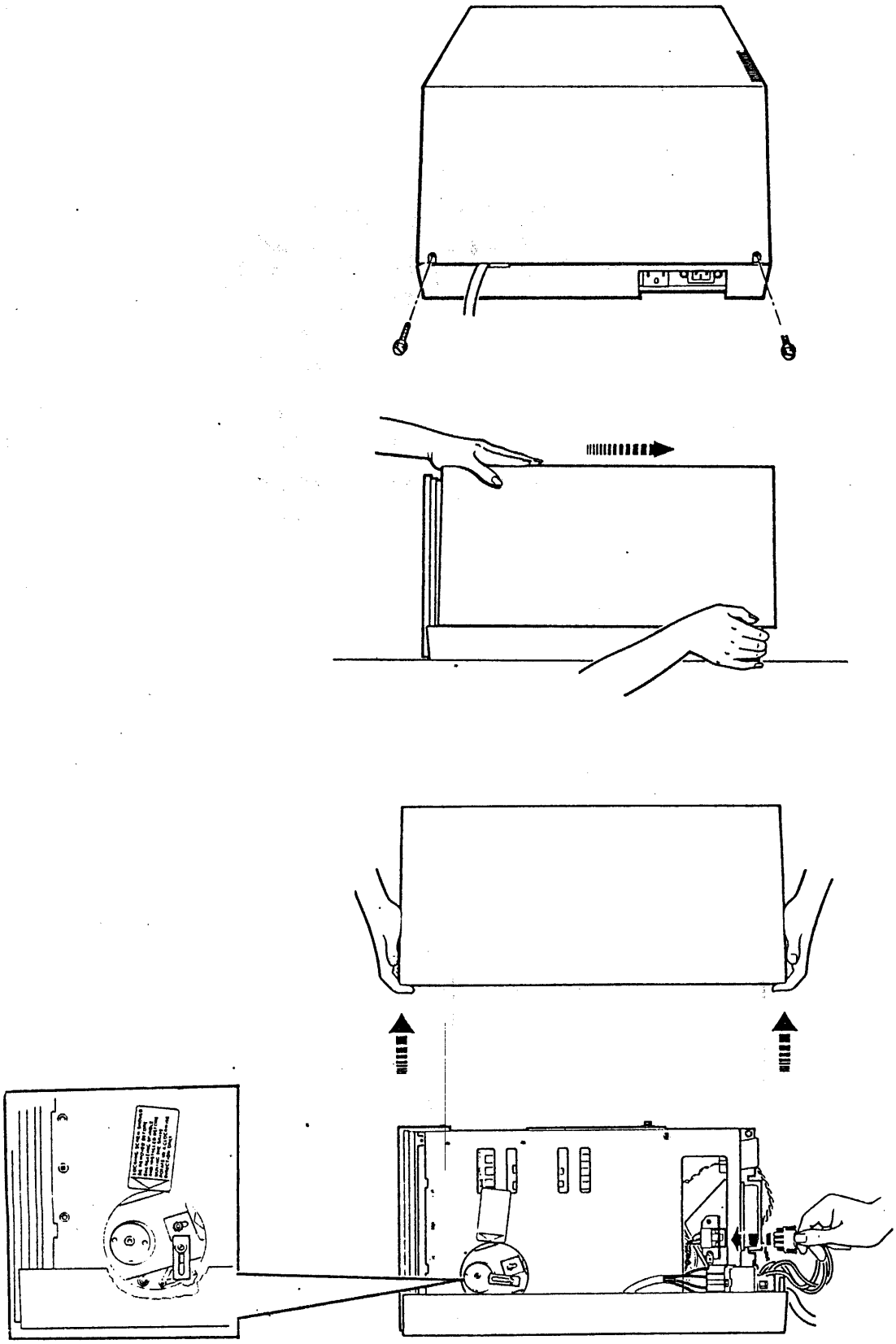

Figure 2-1 Fixed Drive Assembly (8")

REPAIR DATA

Note: The CRT must be turned 90° clockwise while placing it in front of assembly to relieve any strain on high voltage lead.

7. Carefully place CRT on it's face in front of assembly.

8. Remove (4) screws from CRT PWA and remove PWA.

B. REPLACEMENT

WARNING

DO NOT strike, nick, scratch or subject the CRT to any undue pressure. The CRT may implode.

1. Disconnect P102 and P103 from CRT PWA (Ball Monitor only).

2. Disconnect grounding springs from CRT bracket and separate springs (Ball Monitor only).

3. Carefully place CRT in front of assembly with the CRT anode towards the left.

4. Install CRT PWA and place grounding spring toward back of assembly.

5. Connect green ground strap on screw (Motorola only).

NOTE: The CRT must be turned 90° counter clockwise while installing CRT.

6. Carefully install CRT.
7. Connect grounding springs to CRT bracket (Ball Monitor only).

8. Connect P102, P103 and J1 to CRT PWA Ball Monitor only).

9. Connect power cord to wall outlet.

10. Perform adjustment procedure.

C. ADJUSTMENT

Purpose: To obtain the correct size, centering and brightness of the viewing screen.

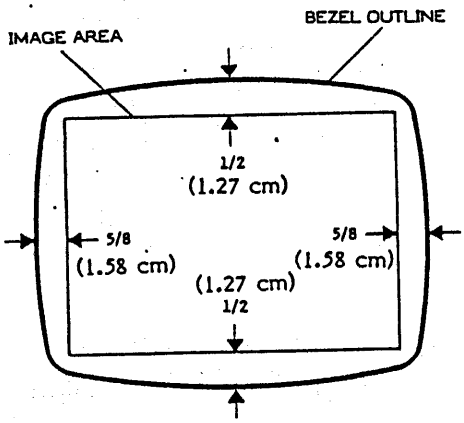

Figure 3-4 DISPLAY ALIGNMENT

Checkout Procedure: Load diagnostic exerciser disc in drive A and an initialized disc in drive B, type A and press RETURN. When X's fill the screen, pre CTRL and type S. Using figure 3-4 check alignment

1. Mark the bezel outline on CRT face with a felt tip/grease pencil.

2. Remove top cover (3.1.1).

3. Turn power on.

4. Load diagnostic exerciser disc in Drive A a an initialized disc in Drive B, type A and pre RETURN.

5. When X's fill screen, press CTRL and type S.

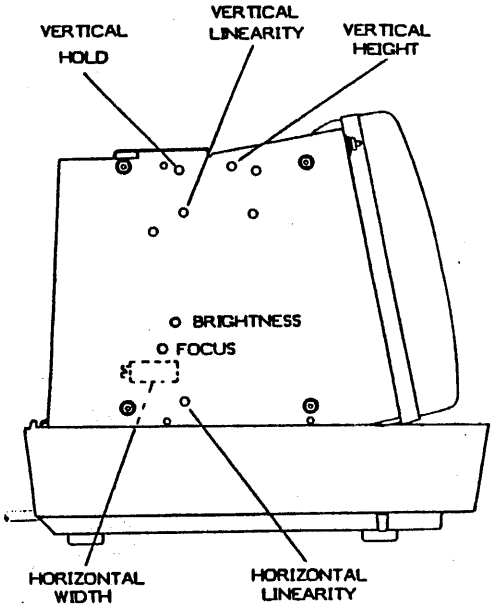

Ball

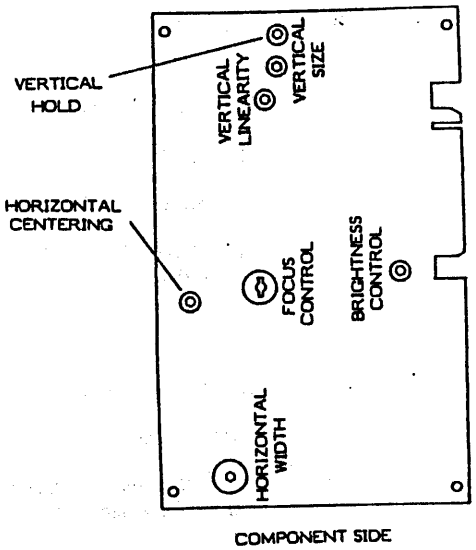

Motorola

Figure 3-5 DISPLAY ADJUSTMENT

3.1 DISPLAY/PROCESSOR

3.1.1 DISPLAY/PROCESSOR COVER(S)

A. REMOVAL

WARNING

High voltage exists on CRT. Remove all jewelry. Use extreme care when working on or around CRT.

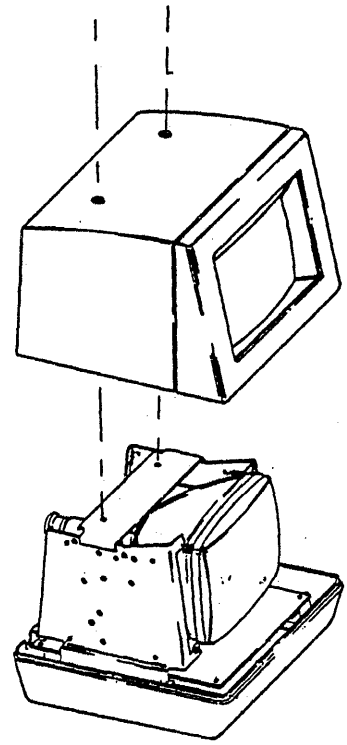

Figure 3-1 REMOVE TOP COVER

1. Turn Power OFF and remove power cord.
2. Remove (2) top cover screws.
3. Lift up top cover to remove.

B. REPLACEMENT

1. Place top cover on display/processor.
2. Install (2) top cover screws.

3.1.2 CRT AND PWA

A. REMOVAL

1. Disconnect power cord from wall outlet.
2. Remove top cover (3.1.1).

WARNING

Do not, strike, nick, scratch or subject the CRT to any undue pressure. The CRT may implode.

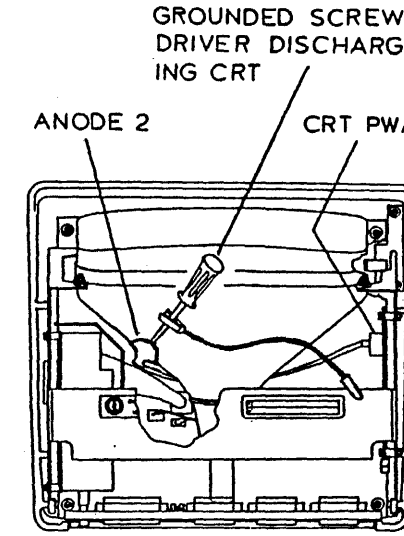

Figure 3-2 DISCHARGE CRT

3. Discharge high voltage on CRT (anode 2) shorting to frame. This is done by using meter lead, alligator clip, and screw driv as shown in fig. 3-2.

4. Disconnect P102, P103 and J1 from C PWA (Ball Monitor only).

5. Disconnect grounding springs from C bracket and separate springs.(Ball Monito only).

WARNING

DO NOT strike, nick, scratch or subject the CRT to undue pressure. The CRT may implode.

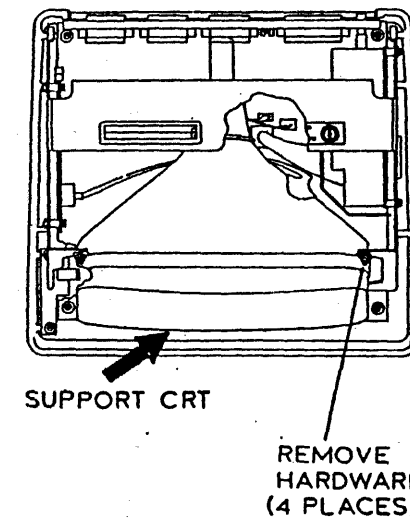

Figure 3-3 REMOVE CRT

6. While supporting the CRT, remove hardware from bracket.

3.1.4 MAIN/PROCESSOR PWA (Continued)

820 PROCESSOR (CPU) PWA
SHUNT CONFIGURATION

REF.	BETWEEN PINS
E1	1 & 2
E2	1 & 2
J9	7 & 8
	11 & 12
	15 & 16
	19 & 20
	23 & 24
	27 & 28
	31 & 32
	35 & 36
J10	3 & 4
	7 & 8

820-II PROCESSOR (CPU) PWA
SHUNT CONFIGURATION

REF.	BETWEEN PINS
E1	1&2
E2	1&2
E4	1&2
E6	2&3
E7	1&2
J9	7&8
	11&12
	15&16
	19&20
	23&24
	27&28
J10	3&4
	7&8

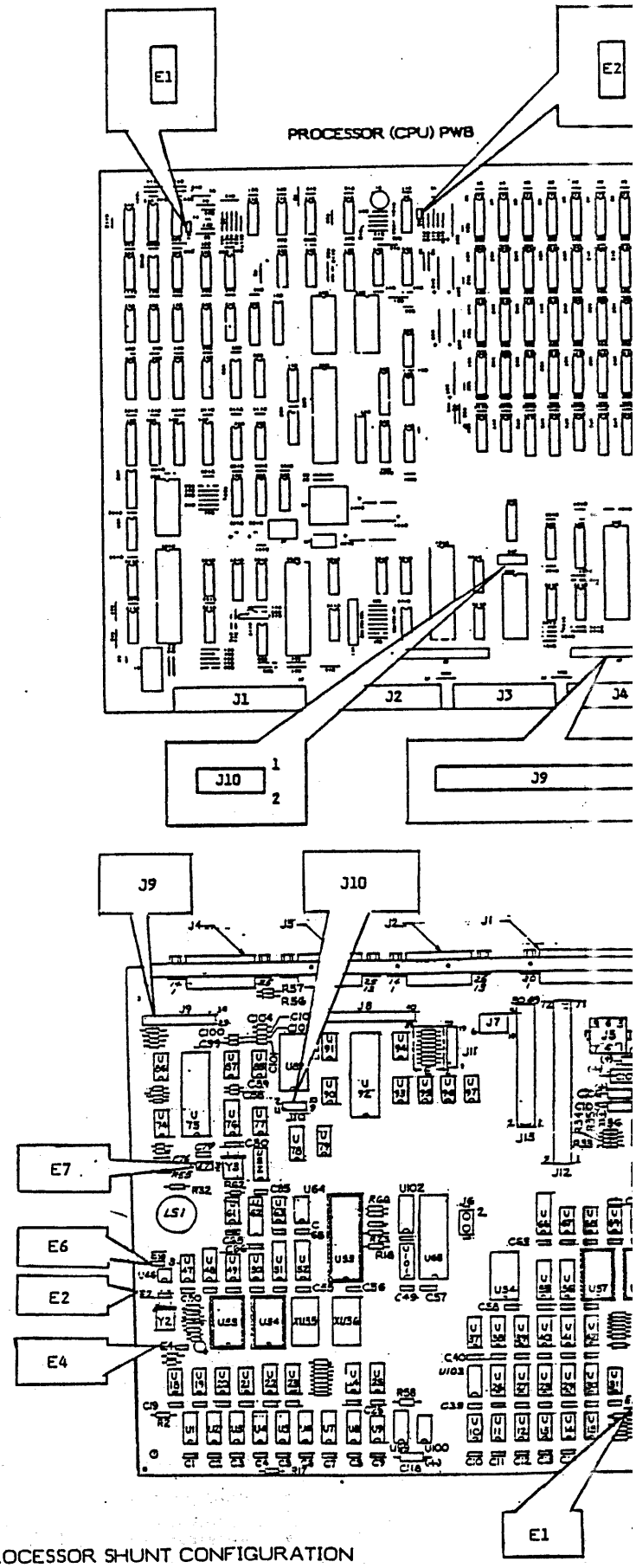

Figure 3-8 PROCESSOR SHUNT CONFIGURATION

6. Position brightness slide control for maximum brightness. Adjust brightness control on the CRT PWA until the raster is visible.

7. Alternately adjust the horizontal width and horizontal linearity/centering until the X's on both sides of the CRT are within 5/8" of the bezel outline (figure 3-4).

8. Alternately adjust the height/size and vertical linearity until the X's on top and bottom of the CRT are within 1/2"(1.27 cm) of the bezel opening (figure 3-4).

9. Adjust vertical hold to center of adjustment range.

10. Position brightness slide control until raster is not visible.

11. Adjust the focus control until the edges and center of the display image is in focus.

12. Dress high voltage lead down, towards processor PWA, and the yellow cathode lead, towards top of assembly.

13. Clean face of CRT and install top cover (3.1.1).

3.1.3 POWER SUPPLY

A. REMOVAL

1. Remove top cover (3.1.1).

2. Disconnect P1 from the power supply and P2 from the processor PWA.

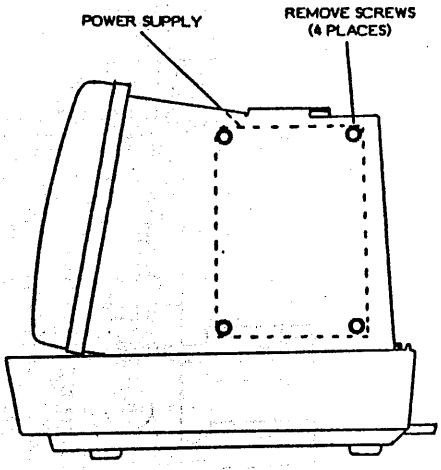

Figure 3-6 REMOVE POWER SUPPLY

3. Remove (4) power supply screws from the CRT frame and remove power supply.

B. REPLACEMENT

1. Install power supply and replace (4) screws.

2. Connect P1 and P2.

3. Install top cover (3.1.1).

3.1.4 MAIN/PROCESSOR PWA

A. REMOVAL

1. Remove top cover (3.1.1).

2. Disconnect all connectors from ba display/processor. (Fig. 3-18)

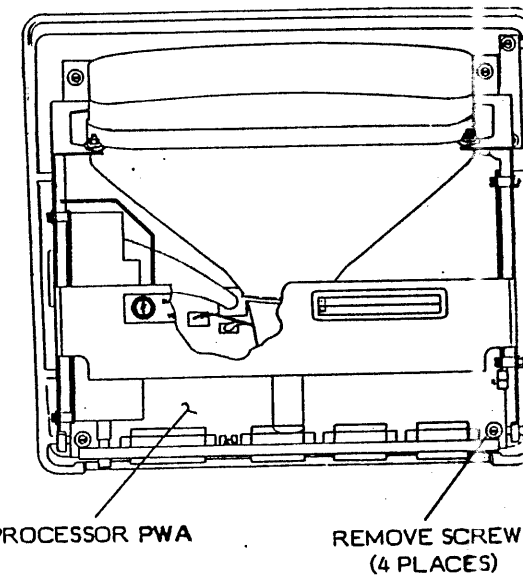

Figure 3-7 PROCESSOR PWA REMOVAL

3. Using a meter lead and alligator clips, screw driver to CRT frame.

4. Discharge high voltage on CRT (anod shorting to frame.(fig. 3-2)

5. Disconnect P5, P6, P7 and spade lug the processor PWA

6. If 820/820-II then remove (2 attaching support block for Daught Remove Daughter PWA from processc

7. Remove (4) screws from the proces and remove by sliding out of the processor.

B. REPLACEMENT

NOTE: Before installing the processor PWA, ens the shunt configuration is correct (Figure 3-8).

1. Install processor PWB and (4) screws.

2. If 820/820-II replace Daughter P support block.

NOTE: Daughter PWA is not keyed. Mat on daughter PWA with pin 1 on connector.

3. Connect P5, P6, P7 and spade lug processor PWA.

4. Connect all connectors to the back c

5. Install top cover (3.1.1).

3.2.2 KEYBOARD PWA

A. REMOVAL

1. Remove keyboard cover (3.2.1).

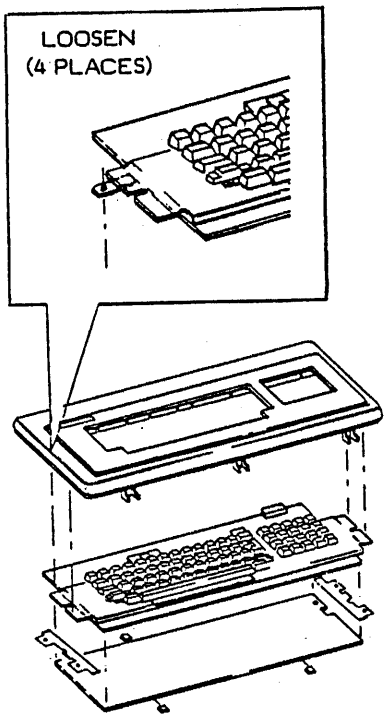

Figure 3-11 REMOVE KEYBORD PWA

2. Remove (4) screws securing keyboard and brackets in place.
3. Remove keyboard, shield, and brackets.

B. REPLACEMENT

1. Install shield.
2. Put keyboard in top cover ensuring alignment tabs are positioned in keyboard bracket cutouts.
3. Position locking tabs over brackets and tighten screws.
4. Install keyboard cover.

3.2.3 KEYBOARD HARNESS ASSEMBLY

A. REMOVAL

1. Turn power off.
2. Disconnect keyboard harness from display/ processor.
3. Remove keyboard cover (3.2.1).

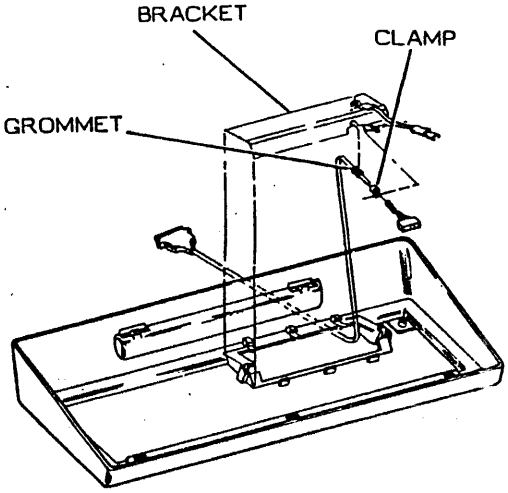

Figure 3-12 REMOVE HARNESS

4. Release locking tabs from harness asser bracket and remove assembly.
5. Remove harness clamp and grommet.

B. REPLACEMENT

1. Install harness clamp and grommet.

CAUTION

Grommet must be inserted in bracket cutou damage to the harness will occur.

2. Install harness on bracket insuring gron is in bracket cutout.
3. Install harness assembly in bottom cover.
4. Install keyboard cover (3.2.1).
5. Connect keyboard harness to dis processor.

3.1.5 POWER ON/OFF SWITCH

A. REMOVAL

1. Disconnect power cord from wall outlet.
2. Remove top cover (3.1.1).
3. Remove main/processor PWA(3.1.4).
4. Disconnect wires from terminals 1 and 2 of the power on/off switch.
5. Remove switch.

B. REPLACEMENT

1. Install switch and connect wires to terminals 1 and 2.
2. Install main/processor PWA (3.1.4).
3. Install top cover (3.1.1).
4. Connect power cord to wall outlet.

3.1.6 BRIGHTNESS CONTROL

A. REMOVAL

1. Remove top cover (3.1.1).
2. Remove main/processor PWA (3.1.4).
3. Remove knob from brightness control lever by pulling down on knob.
4. Disconnect P1 from brightness control.
5. Remove (2) screws from brightness control and remove.

B. REPLACEMENT

1. Install brightness control and (2) screws.
2. Connect P1 to brightness control.
3. Install brightness control knob.
4. Install main/processor PWA(3.1.4).
5. Perform brightness adjustment (3.1.2C).
6. Install top cover (3.1.1).

3.2 KEYBOARD

3.2.1 KEYBOARD COVER(S)

A. REMOVAL

1. Turn power off.

CAUTION

When releasing locking tabs, if pressure is not applied directly above tabs, they may break.

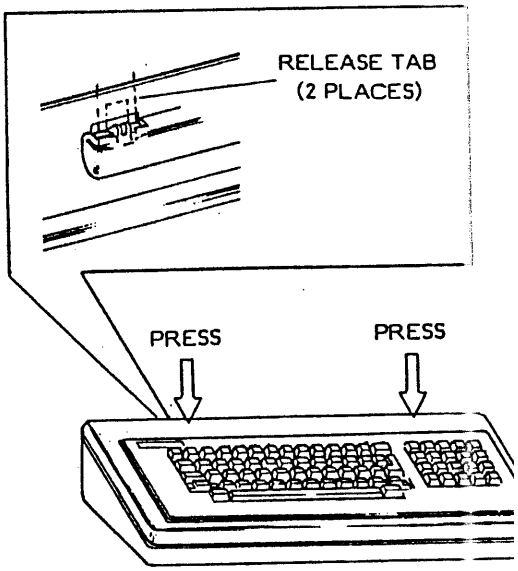

Figure 3-9 REMOVE COVER

2. Press on cover above locking tabs and tabs.

CAUTION

The keyboard harness and grounding wire mu connected before removing top cover and keybo

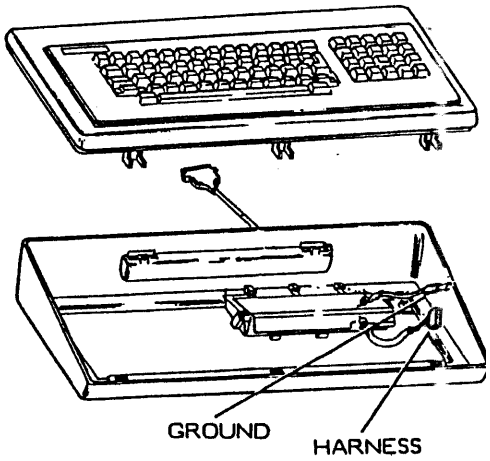

Figure 3-10 DISCONNECT CABLE(S)

3. Lift back of top cover, disconnect key harness and grounding wire.
4. Remove top cover and keyboard.

B. REPLACEMENT

1. Connect keyboard harness and ground wire.
2. Insert front tabs of keyboard.
3. Press on cover above locking tabs and tabs.

3.3 DISK DRIVE ASSEMBLY (5.25")

3.3.1 DISK COVER(S)

A. REMOVAL

1. Turn power off.
2. Disconnect disk drive harness from display/processor.

NOTE: In the following step, protect top cover from damage.

3. Turn disk drive over to allow removal of the cover mounting screws.

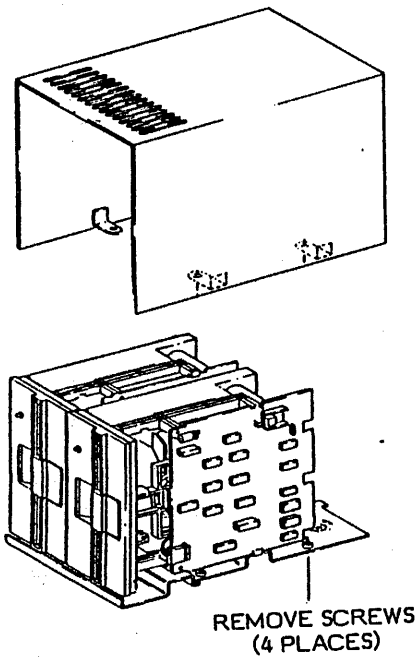

Figure 3-13 TOP COVER REMOVAL

4. Remove (4) top cover screws and remove cover.

B. REPLACEMENT

1. Install drive assembly in top cover.
2. Install (4) top cover screws.
3. Connect drive assembly to display/processor.

3.3.2 DISK DRIVE

A. REMOVAL

1. Remove top cover (3.3.1).
2. Disconnect P1 and P2 from disk drive PWA

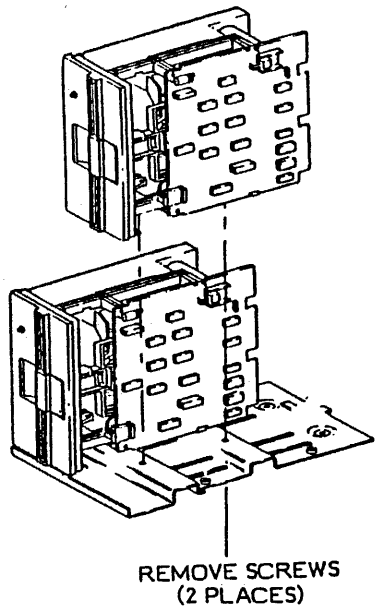

Figure 3-14 DISK DRIVE REMOVAL

3. Remove (2) disk drive screws and remov drive.

B. REPLACEMENT

NOTE: The left disk drive must be conf before installing.

1. Position disk drive under bottom cover.
2. Install (2) disk drive screws.
3. Connect P1 and P2.
4. Install top cover (3.3.1).

C. ADJUSTMENT

Purpose: To strap the left drive for p drive A and the right drive for physical drive

Checkout Procedure: Load the system/dia disc from drive A and check operation.

3.3.2 DISK DRIVES (S)

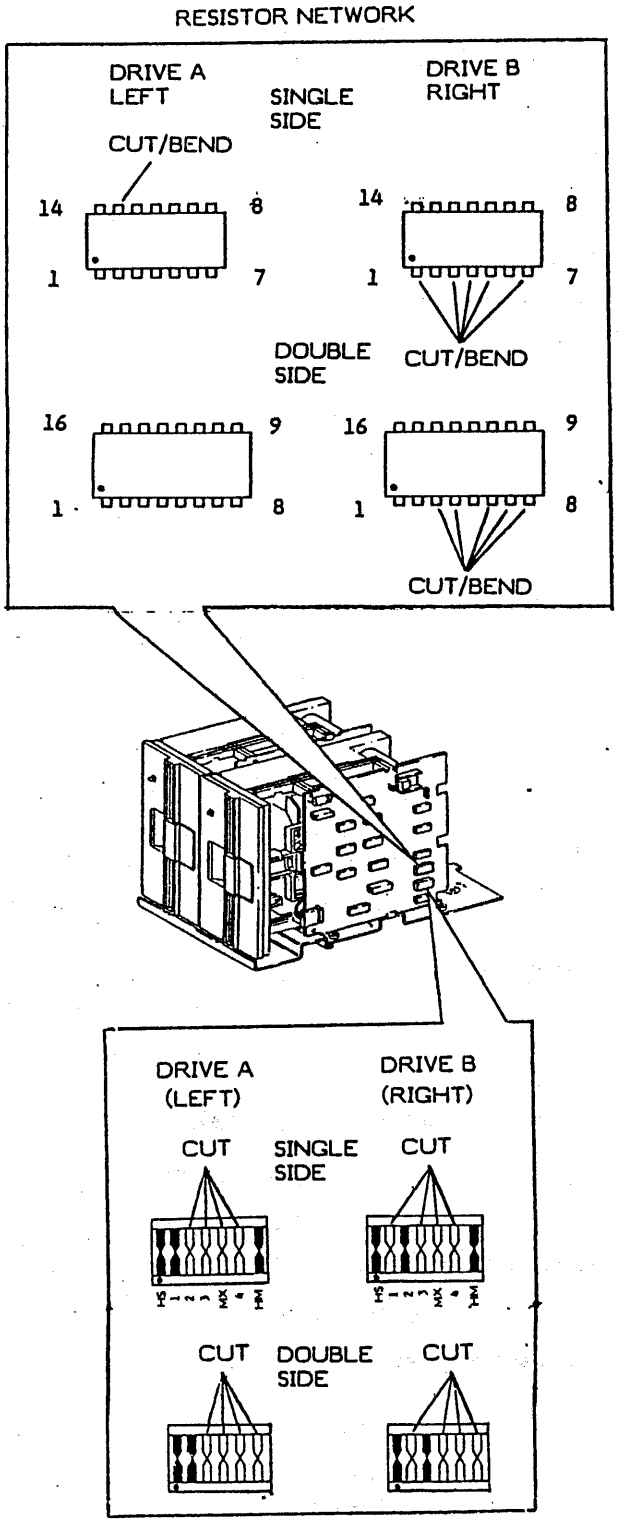

Figure 3-15 DISK DRIVE

1. Configure program shunt by cutting shunts as shown in drawing.
2. Configure resistor network as shown in drawing.

3.3.3 HEAD LOAD PAD

A. REMOVAL

1. Remove top cover (3.3.1).

NOTE: To remove load button on left disk dri remove drive before proceeding.(3.3.2)

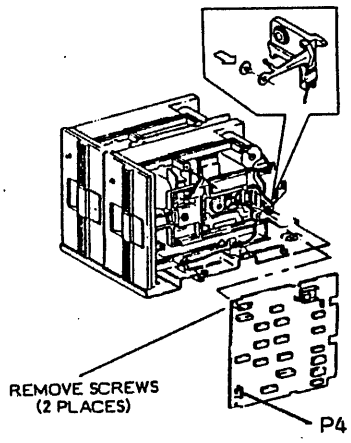

Figure 3-16 HEAD LOAD PAD REMOVAL

2. Disconnect P1, P2, P4 and remove (2) s from disk drive PWA
3. Remove PWA from bracket and move to ri of drive.
4. Hold load arm away from head, sque locking tabs together with needle nose pl and press forward.

B. REPLACEMENT

1. Press head load pad into load arm from h side. Inspeck and clean head if necessary.
2. Install drive PWA.
3. Install top cover (3.3.1).

3.3.4 DISK DRIVE BELT

A. REMOVAL

1. Remove top cover (3.3.1).

NOTE: To remove drive belt from right drive, remove drive before proceeding.(3.3.2)

2. Remove drive belt.

B. REPLACEMENT

1. Install drive belt with smooth side of against pulley.
2. Perform adjustment.
3. Install top cover (3.3.1).

3.4.2 DISK DRIVE(S)

A. REMOVAL

1. Remove top cover (3.4.1).
2. Disconnect AC, DC, and signal harness plugs from disk drive.
3. Loosen (2) screws holding front bezel in place and remove bezel.(Fig. 3-20)
4. Remove (2) disk drive screws and remove disk drive.(Fig. 3-20)

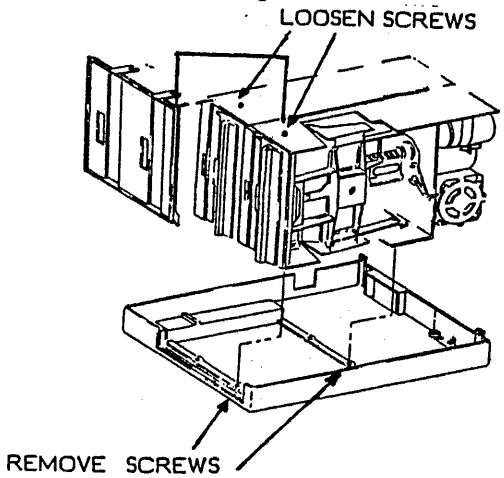

Fig. 3-20 DISK DRIVE REMOVAL

B. REPLACEMENT

NOTE: The right disk drive must be configured before installing.(3.4.2)

1. Position disk drive on bottom cover.
2. Install (2) disk drive screws.
3. Install front bezel .
4. Connect AC, DC, and signal harness plugs to disk drive.

NOTE: When replacing left Disk Drive the clamp holding the AC/DC harness should be replaced also.

5. Install top cover (3.4.1).

C. ADJUSTMENT

1. Replacement disk drive must be jumpered before installation (Fig. 3-21)

NOTE: The disk drive spare may have factory-installed jumpers which are different from those shown in Fig.3-21. Some models of this disk drive will not have jumper pins at location L. A wire has been soldered to accomplish the same function.

2. Refer to Fig. 3-21 and configure jumpers exactly as shown.
   a. Remove any jumpers not shown in Fig. 3-21.
   b. Add any jumpers necessary, as shown in Fig. 3-21.

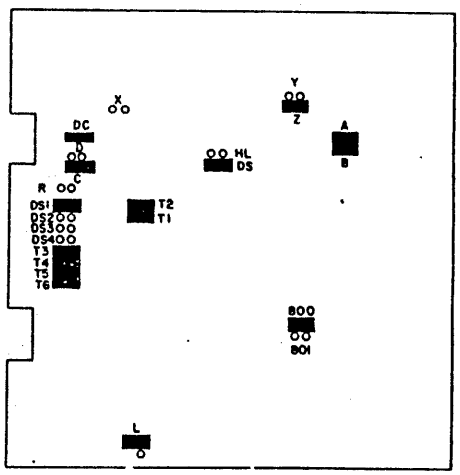

Left Disc Drive

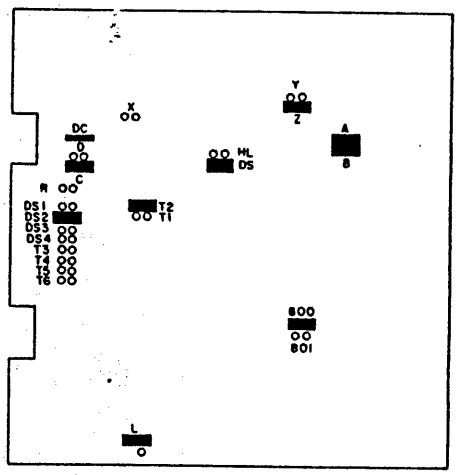

Right Disc Drive

Figure 3-21
SINGLE SIDE
Disc Drive Jumper Locations

cont.

C. ADJUSTMENT (Motor Speed)

Purpose: To adjust the disk drive motor for correct operating speed.

Checkout Procedure:
NOTE: When performing the checkout procedure, do not disconnect disk drive harness from display/processor.

- o Remove top cover (3.3.1) and observe the dark lines of the rings on the spindle pulley. The dark lines should appear motionless.The outside ring is 60 HZ and the inside ring is 50 HZ.

NOTE: This adjustment can be made only in an area where there is flourescent lighting.

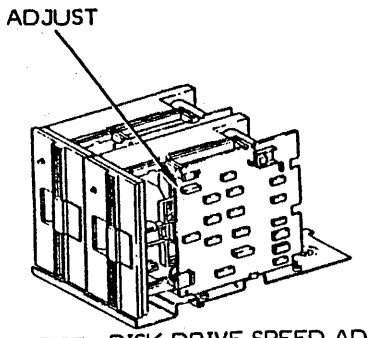

Figure 3-17 DISK DRIVE SPEED ADJUSTMENT

1. Install disk in drive to be adjusted, type A/B press return.

USO

2. Adjust motor speed pot until the dark lines of the outside ring on the spindle pulley appear motionless.

RXO

3. Adjust motor speed pot until the dark lines of the inside ring on the spindle pulley appear motionless.

4. Install top cover (3.3.1).

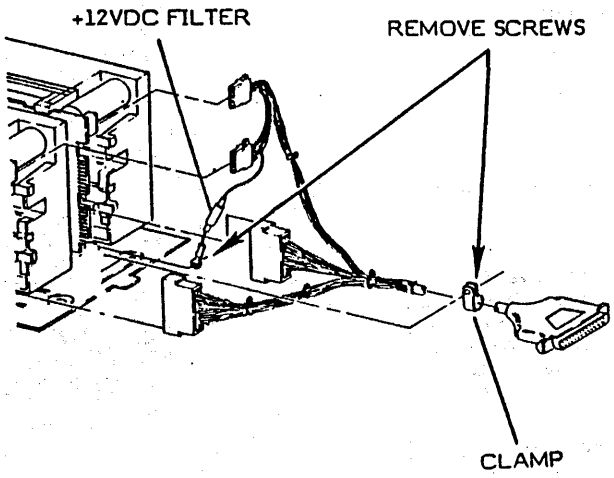

Figure 3-18 DISK DRIVE HARNESS REMOVAL

3.3.5 DISK DRIVE HARNESS

A. REMOVAL

1. Remove top cover (3.3.1).
2. Disconnect P1, P1A, P2 and P2 drives.
3. Disconnect black lead (+12VDC bottom cover.
4. Disconnect and remove harne clamp and save.

B. REPLACEMENT

1. Install restraint clamp over harn
2. Attach restraint clamp to botton
3. Attach black lead (+12VDC filte cover.
4. Connect P1, P1A, P2 and P2A to
5. Install top cover (3.3.1).
6. Connect disk drive h display/processor.

3.4 DISK DRIVE ASSEMBLY (8")

3.4.1 DISK COVER(S)

A. REMOVAL

1. Turn power off.
2. Disconnect P1, P1A, P2 and P drives.(Fig.3-18)

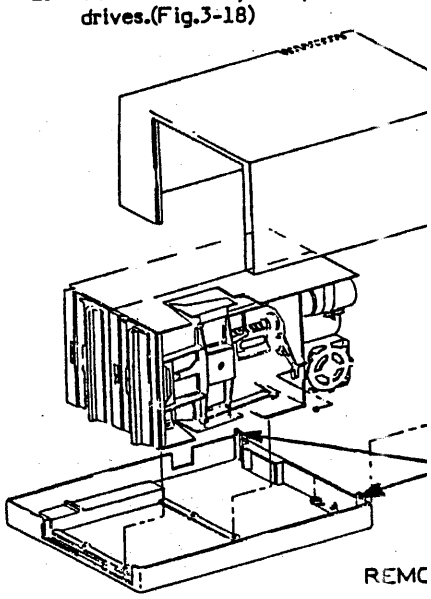

Fig. 3-19 TOP COVER REMOVAL

3. Remove (2) screws at the asembly (Fig. 3-19), slide cov rear, then lift top cover off.

B. REPLACEMENT

1. Install top cover on Drive ass
2. Slide cover towards the front
3. Install (2) rear cover screws.
4. Connect drive assembly to di

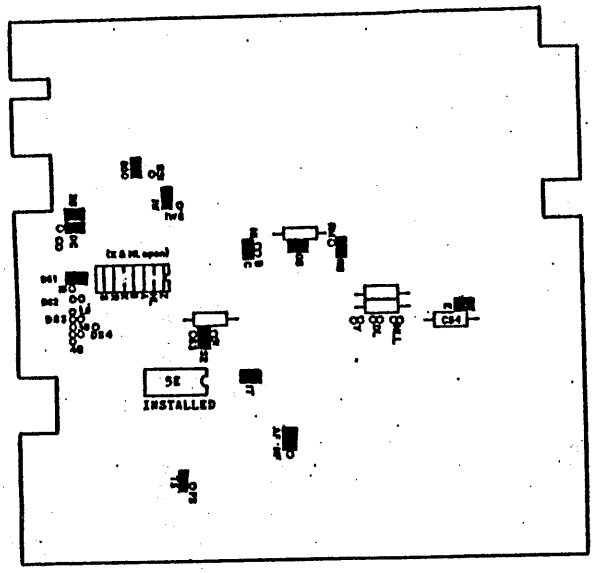

Left Disc Drive

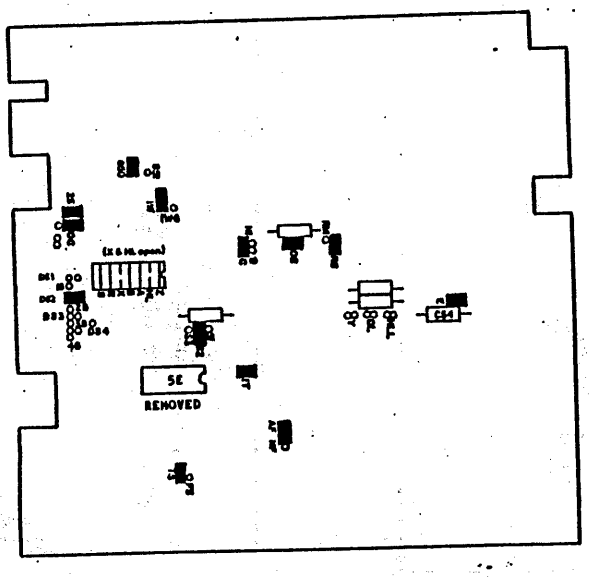

Right Disc Drive

Figure 3-21
DOUBLE SIDE/ MLC 12 PWA
Disc Drive Jumper Locations

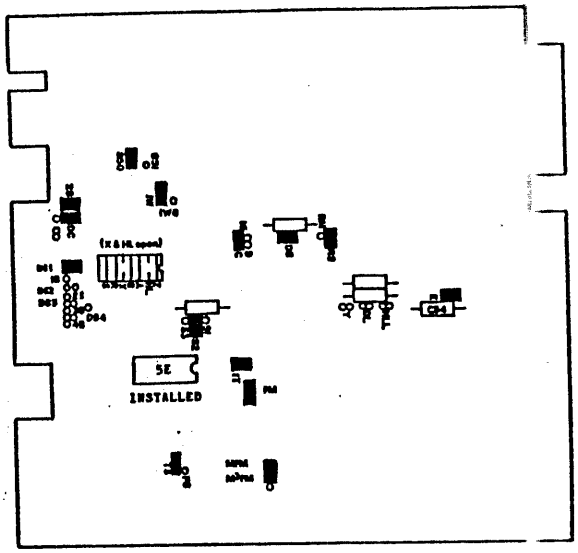

Left Disc Drive

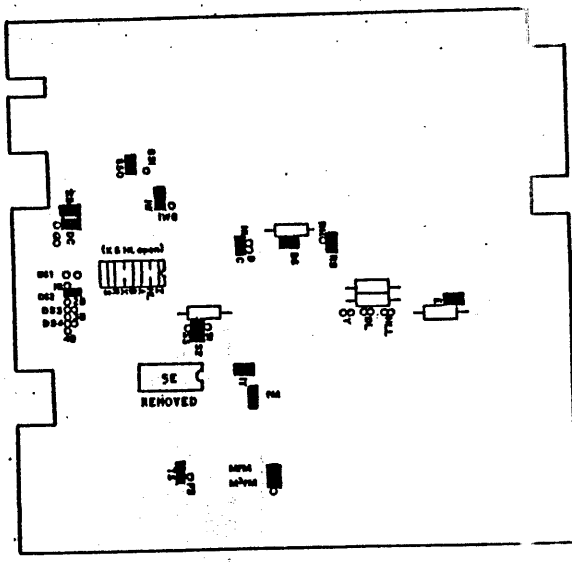

Right Disc Drive

Figure 3-21
DOUBLE SIDE/ MLC 14 PWA
Disc Drive Jumper Locations

3.4.3 HEAD LOAD PAD, SINGLE SIDE DISK DRIVE

REMOVAL

1. If removing left disc drive load pad, remove t cover (3.4.1) and left disc drive (3.4.2). removing the right disc drive load pad, remo top cover only.
2. Rotate head stepper motor shaft at rear of until head assembly is moved forward.
3. Lift and hold head load arm out away head.(Fig. 3-22)
4. Squeeze locking tabs together with needle pliers and press forward to pop out load pad.

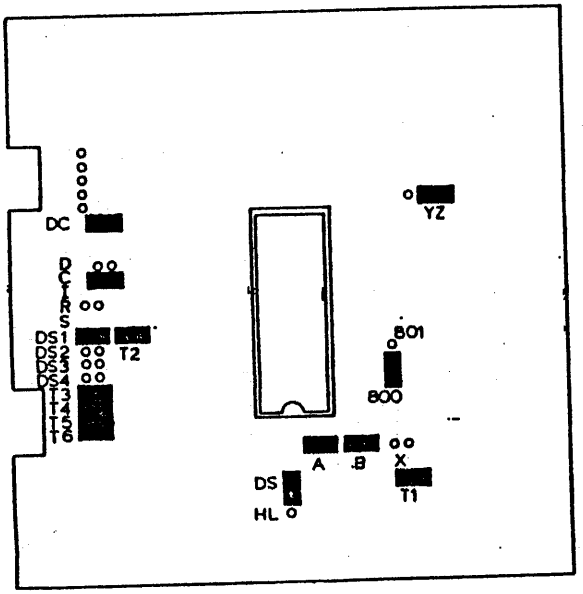

Left Disc Drive

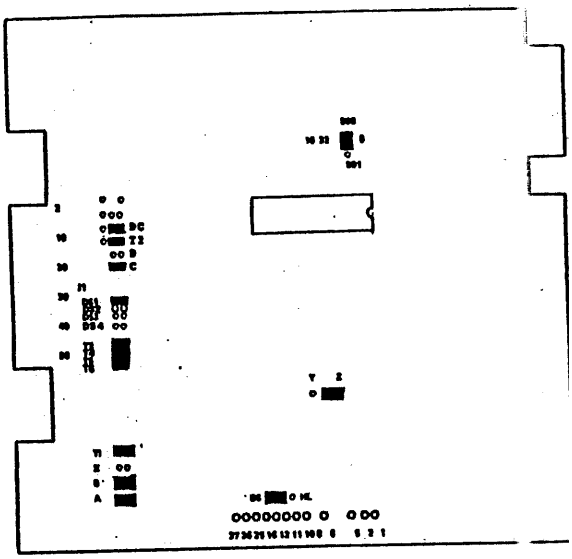

Left Disc Drive

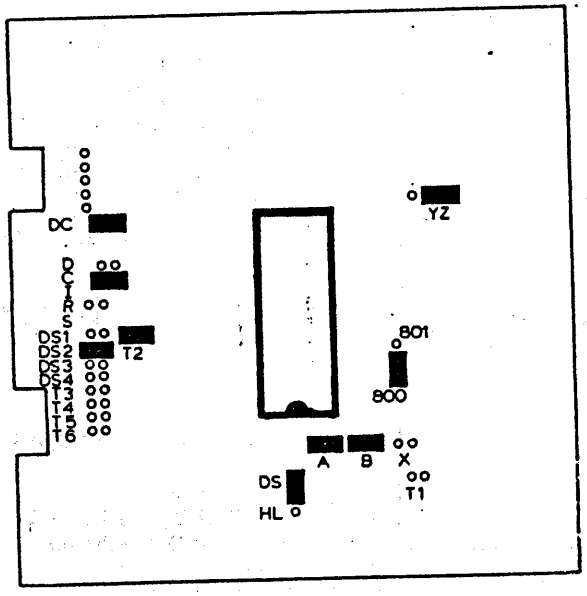

Right Disc Drive

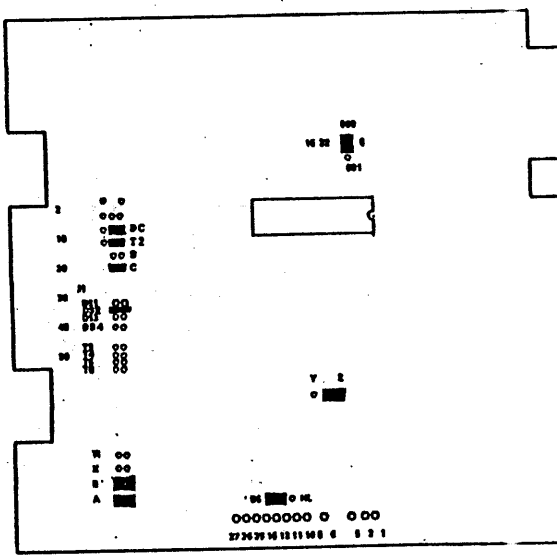

Right Disc Drive

Figure 3-21
SINGLE SIDE w/ LSI CHIP
Disc Drive Jumper Locations

Figure 3-21
SINGLE SIDE w/NEW LSI CHIP CONFIGU
Disc Drive Jumper Locations

3.5.2 FIXED DRIVE CONTROLLER PWA

A. REMOVAL

1. Remove top cover. (3.5.1)
2. Remove (2) screws supporting Controller PWA support bracket to drives. (fig. 3-25)

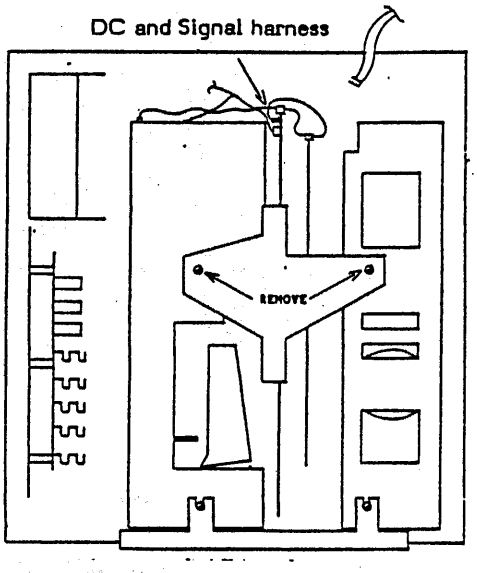

Fig. 3-25 FIXED DRIVE ASSEMBLY

3. Unplug DC and signal harness plugs from Controller PWA.
4. Lift Controller PWA and support out of drive assembly.
5. Remove (5) screws attaching PWA to support.

B. REPLACEMENT

1. Refer to procedure 3.5.8 for switch setting.
2. Fasten Controller PWA to support bracket with (5) screws.
3. Lower PWA and bracket into the slot between floppy drive and fixed drive.(fig.3-25)
4. Attach DC and signal harnesses to PWA.(fig.3-25)

   NOTE: Care should be taken when reinstalling signal harness.
5. Secure bracket with (2) screws to drives.
6. Replace top cover.(3.5.1)

3.5.3 FIXED DRIVE

A. REMOVAL

1. Remove top cover.(3.5.1)
2. Remove Controller PWA.(3.5.2)
3. Secure locking Key into spindle (Fig.3-26)

   CAUTION

   DO NOT ATTEMPT TO MOVE DRIVE WITHOUT SPINDLE LOCKED DOWN.

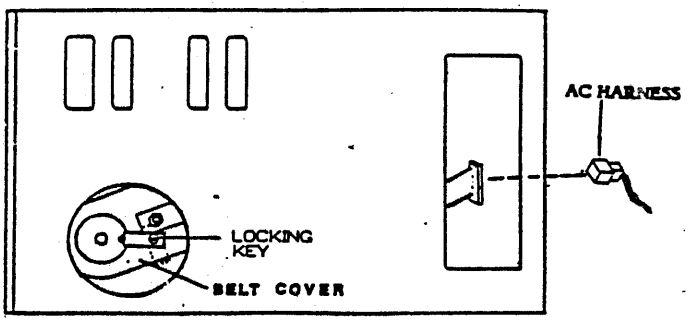

NOTE: Whenever the machine or the fixed drive is moved,the lock key must be put back in place to keep from damaging the drive. When removing the lock key, turn it bottom side up and fasten it to the drive so it can be stored for future use.

Fig. 3-26 FIXED DRIVE SPINDLE LOCK

4. Disconnect AC, DC, and signal harness.
5. Disconnect ground strap from AC connector.
6. Loosen (2) screws securing bezel.(fig. 3-20) and remove bezel.
7. Remove (2) screws securing Fixed Drive to base and remove drive.(Fig.3-20)

B. REPLACEMENT

1. Replace drive onto base and install (2) screws.(Fig.3-20)
2. Install front bezel.(fig.3-20)
3. Connect ground strap, AC, DC, and signal harness.
4. Replace Controller PWA.(3.5.2)
5. Remove locking screw, invert spindle locking key, and attach it to the drive casing.(fig.3-26)
6. Replace top cover.(3.5.1)

3.5.4 10 MB CONTROL PWA

A. REMOVAL

1. Remove top cover (3.5.1.).
2. Remove fixed controller PWA (3.5.2.).
3. Remove fixed drive (3.5.3).
4. Disconnect J6 through J9 on 10 MB control PWA. (See Figure 3-27).
5. Remove one screw located at top edge of PWA. (Fig.3-27)
6. Unfasten the (3) quarter turn PWA mounts.
7. Remove 10 MB control PWA.

REPLACEMENT

CAUTION

Do not touch the soft pad surface on the load pad. The oil or dirt from fingers can harm the disc surface.

1. Press load pad into arm from head side until it snaps into place.
2. Lightly wipe the read/write head with Clean-ups and allow load pad arm to return to operating position.
3. Replace disk drive, if removed, and verify repair.
4. Replace top cover (3.4.1).
5. Run diagnostics to verify replacement.

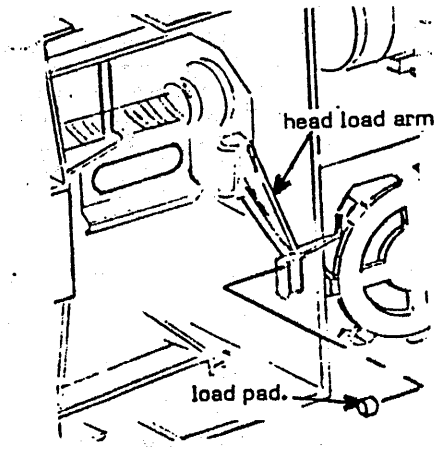

FIG. 3-22 HEAD LOAD PAD REPLACEMENT

3.4.4 8" DISC DRIVE POWER SUPPLY

REMOVAL

1. Turn drive power off.
2. Remove top cover (3.4.1)
3. Remove (4) nuts securing power supply to bracket.(Fig. 3-23)
4. Disconnect P-1 and P-2 from power supply and lift out.

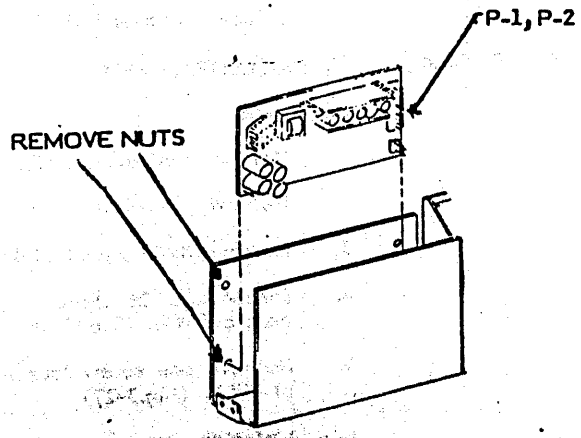

FIG. 3-23 POWER SUPPLY REPLACEMENT

REPLACEMENT

1. Connect P-1 and P-2 to power supply.
2. Secure power supply with (4) nuts to bra
3. Check J-5 pins on disk drive board to voltages (Fig. 3-24).
4. Replace top cover (3.4.1).
5. Run diagnostics to check system.

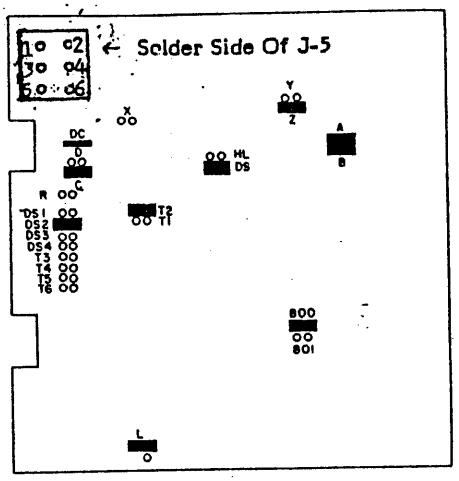

FIG. 3-24 J-5 PLUG ON DRIVE BOARD

3.5 FIXED DRIVE ASSEMBLY

Note: For removal and replacement of 8" floppy fixed assembly reference floppy drive assembly 8" For jumper configuration reference 3.5.8, step 3.

NOTE: For removal and replacement of power the fixed drive assembly, reference 8" disk dri supply 3.4.4.

3.5.1 DISK COVER(S)

A. REMOVAL

1. Turn power off.
2. Disconnect disk drive harness display/processor.
3. Remove (2) screws at the rear of assembly (fig.3-19), slide cover towards then lift cover off.

NOTE: The long screw in the left side (as v from the rear of the unit) of assembly is to the interlock switch. When replacing be su install long screw in left side.

B. REPLACEMENT

1. Install top cover on drive assembly.
2. Slide cover towards front.
3. Install (2) rear cover screws. Facing th of the assembly the long screw goes left side.
4. Connect signal harness to display/processor.

9. Loosen and slide capacitor mounting bracket out of way.

10. Note wire color codes connecting to capacitor, then remove wires from capacitor.

11. Remove remaining motor mounting nuts and washers, and remove motor and cable harness.

B. REPLACEMENT

NOTE: If replacing only the belt, perform steps 9 thru 15.

1. Remove motor pulley off of old motor and install onto new motor.
2. Motor pulley should be .035 inch (.88 MM) up off of motor face. (See Figure 3-29). Ensure that one set screw is located on flat side of motor shaft.

3. Mount motor to casting placing an insulating washer on each side of casting on all four posts except the post which the belt cover mounts, no washer is needed on the nut side of that post.

4. Verify center to center distance of 7.74 inches (19.6 cm) from motor shaft to spindle shaft.

5. Reposition motor if necessary to meet center to center spacing and tighten nuts.

6. Replace color coded wires on the noted leads of capacitor.

7. Route wires for rear AC connector and mount in rear bracket.

8. Rotate capacitor securing bracket over capacitor and tighten screw.

9. Replace 10 MB Drive Belt by sliding over pulleys with number of belt on outer side.

CAUTION

Rotating the spindle in a counterclockwise direction will cause severe damage to the heads or media.

10. Replace 10 MB belt cover and securing nut. (Use motor mounting post and nut inside of belt path.)

11. Replace drive spindle lock.

12. Replace 10 MB disc cover and (3) securing screws.

13. Replace fixed disc drive (3.5.3.).

14. Replace fixed controller PWA (3.5.2.).

15. Replace top cover (3.5.1.).

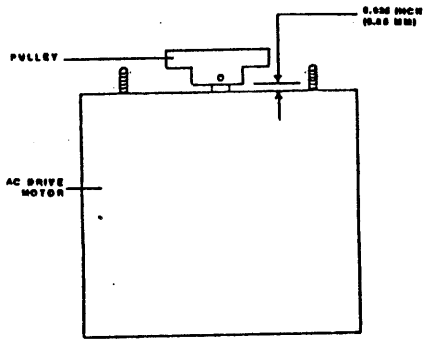

Figure 3-29
10 MB DRIVE MOTOR
Pulley Replacement

3.5.7 DAMPER ASSEMBLY

A. REMOVAL

1. Remove top cover (3.5.1.).

2. Remove fixed controller PWA (3.5.2.).

3. Remove fixed disc drive (3.5.3.).

4. Remove 10 MB disc cover by removing (3) securing screws.

CAUTION

AC power must be applied to drive when removing damper.

CAUTION

Do not turn on system power until spindle locking bracket is removed.

5. Position drive on its side with damper facing up.

6. Remove spindle locking bracket, connect J4 and apply power to fixed disc drive.

7. Remove filler screw from side of damper. (See Figure 3-30).

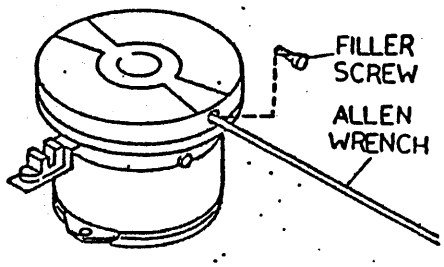

Figure 3-30
DAMPER ASSEMBLY
Removal Procedure

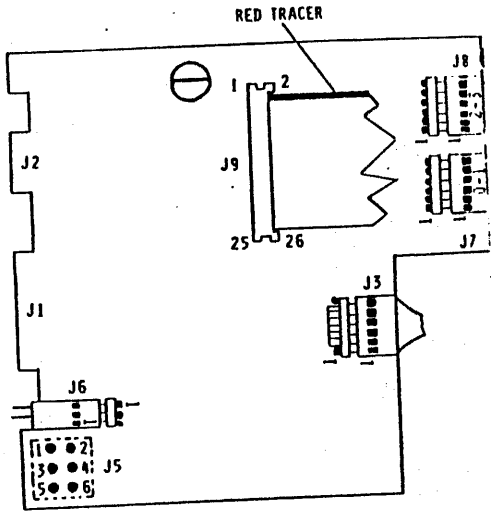

Figure 3-27
10 MB CONTROL PWA

B. REPLACEMENT

1. Refer to procedure 3.5.8, step 2, for jumper settings.
2. Replace 10 MB control PWA.
3. Fasten the (3) quarter turn PWA mounts.
4. Replace one screw located at top edge of PWA.
5. Refer to Figure 3-27 and reconnect J-5 through J-9.
6. Replace Fixed Disc Drive (3.5.3.).
7. Replace fixed drive Controller PWA (3.5.2.).
8. Replace top cover (3.5.1.)

NOTE: On future fixed drive systems the stepper control PWA will be incoporated into a 10 MB control PWA.

3.5.5 10 MB STEPPER PWA

A. REMOVAL

1. Remove top cover (3.5.1).
2. Remove fixed controller PWA (3.5.2.).
3. Remove fixed drive (3.5.3.).
4. Remove 10 MB disc drive cover by removing (3) screws securing cover to casting.
5. Disconnect flat ribbon connector from stepper PWA.(figure 3-28).
6. Remove (3) screws securing stepper PWA to casting.
7. Remove stepper PWA. (See Figure 3-28).

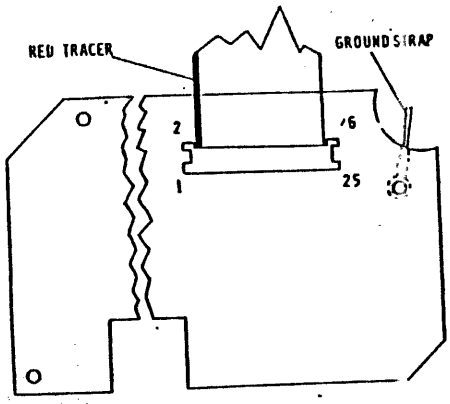

Figure 3-28
10 MB STEPPER PWA

B. REPLACEMENT

1. Replace stepper PWA.
2. Replace ground strap and (3) screw stepper PWA to casting.(Fig. 3-28)
3. Connect flat ribbon connector to s PWA.
4. Replace disc cover and the (3) se screws.
5. Replace fixed drive (3.5.3.).
6. Replace fixed controller PWA (3.5
7. Replace top cover (3.5.1.).

3.5.6 10 MB DISC MOTOR/BELT

A. REMOVAL

1. Remove top cover (3.5.1.).
2. Remove fixed controller PWA (3.
3. Remove fixed drive (3.5.3.)
4. Remove 10 MB disc cover by r (3) screws securing disc cover to
5. Remove spindle locking key

CAUTION

Rotating the spindle in a counterclockwise c cause severe damage to heads or media.

6. Remove 10 MB disc belt (removing the (1) nut securing casting.
7. Remove 10 MB disc belt by s belt off the motor pulley.
8. Remove AC connector fr bracket.

NOTE: Perform steps 8 thru 11 only if r disk drive.

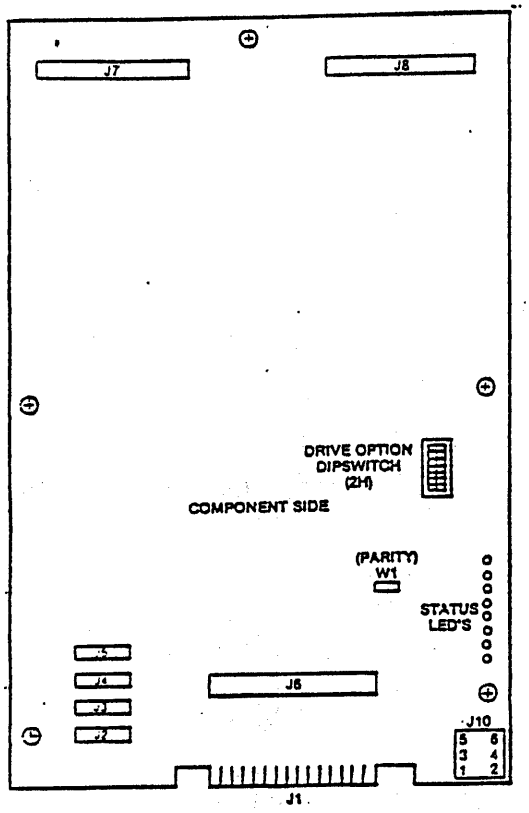

Figure 3-34
FIXED DISC CONTROLLER PWA
Switch Settings

2. Replacement 10 MB disc controller PWA must be jumpered before installation to match Figure 3-35.

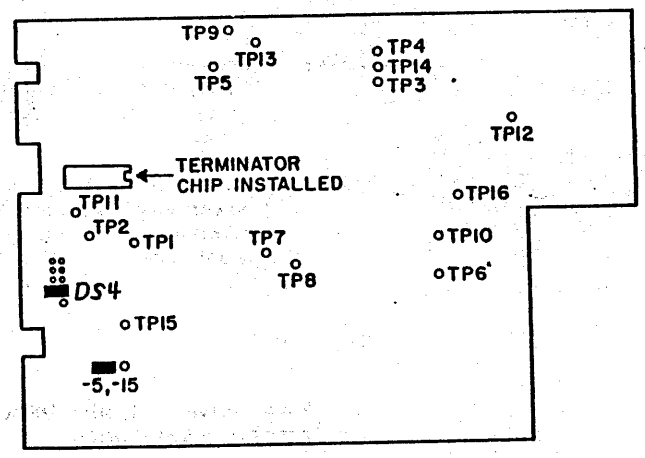

Figure 3-35
10 MB DISC CONTROLLER PWA
Jumper Settings

3. 8" floppy disc controller PWA must be jumpered before installation to match Figure 3-36.

NOTE: Spares may be jumpered differently or may have soldered or wire wrap wire instead of jumpers, which will require correcting to the appropriate setting or jumper.

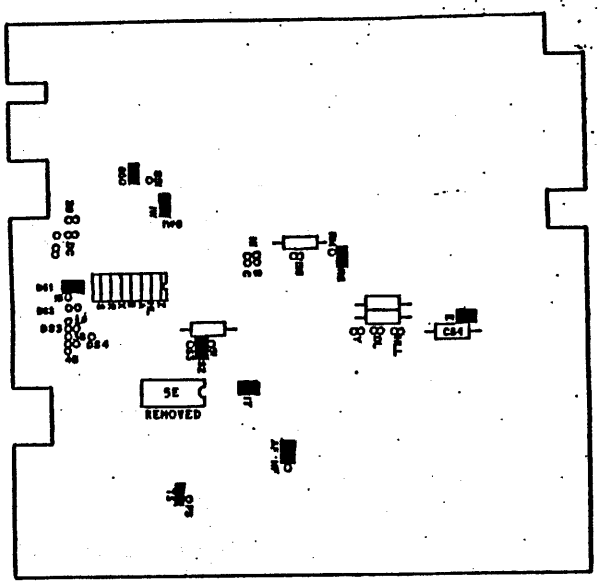

Figure 3-36
DOUBLE SIDE/MLC 12 PWA
Disc Drive Jumper Locations

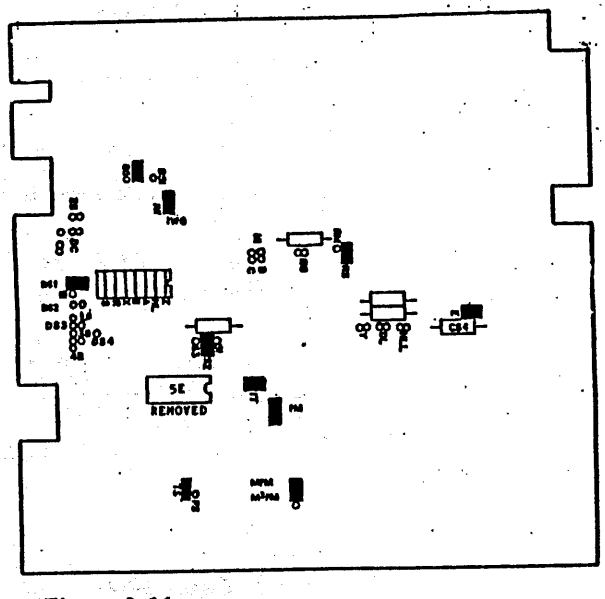

Figure 3-36
DOUBLE SIDE/MLC14 PWA
Disc Drive Jumper Locations

8. Insert a .05 inch (1.27 MM) allen wrench into hole and loosen screw. (See Figure 3-31).

9. Rotate damper 90° and loosen second set screw.

10. Gently remove damper with upward pressure.

11. Replace filler screw.

12. Turn power off.

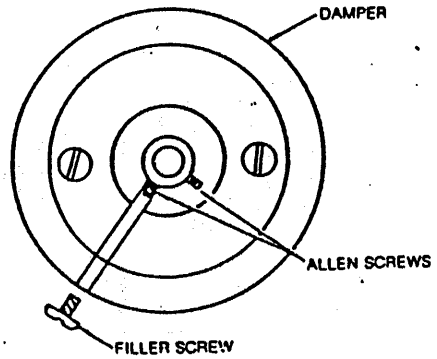

Figure 3-31
DAMPER ASSEMBLY
Screw Locations

B. REPLACEMENT

1. Ensure power is on and J4 is connected.

CAUTION

Do not move damper assembly without AC power applied to fixed disc.

2. Locate and align one set screw with filler hole on replacement damper.

3. Using plier, remove damper plug. (See Figure 3-32).

4. Remove filler screw from side of damper.

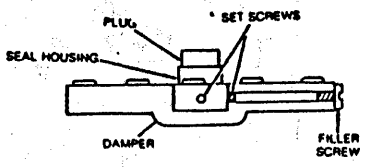

Figure 3-32
DAMPER ASSEMBLY
with Plug

5. Place damper on actuator motor shaft .01 inch (.25 MM) off the track 00 flag collar.

6. Tighten set screw rotate 90° and tighten second set screw. (See Figure 3-33).

7. Replace filler screw.

8. Wipe damper clean.

9. Turn off system power.

10. Replace 10 MB disc cover.

11. Replace fixed disc (3.5.3.).

12. Replace fixed controller PWA (3.5.2.).

13. Replace top cover (3.5.1.).

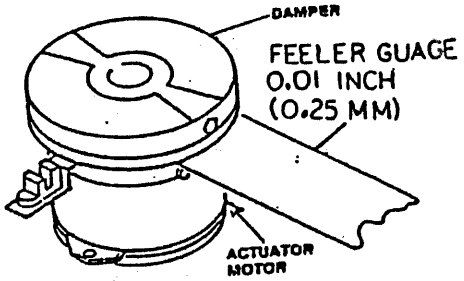

Figure 3-33
DAMPER ASSEMBLY
Replacement Procedure

3.5.8 FIXED DISC ASSEMBLY ADJUSTMENTS

NOTE: For removal and replacement of 8
floppy drive in fixed drive housir
reference floppy drive assembly 8
3.4.2.

NOTE: For removal and replacement
power supply in fixed drive housi
reference 8" disc drive pow
supply 3.4.4.

1. Fixed drive controller PWA switches set before installation.

DIP SWITCH SETTINGS

A. Switches 2, 3, 5 ON
Switches 1, 4, 6, 7, 8 OFF
Refer to (Figure 3-34).

3.5.9 INTERLOCK SWITCH

A. REMOVAL

NOTE: Interlock switch has AC power going to it. Disconnect AC cord before removal and replacement.

1. Remove top cover (3.5.1)
2. Remove securing screw for interlock switch mounting bracket.
3. Lift interlock bracket out, and disconnect interlock harness from interlock switch at connection J5/P5.
4. Remove interlock switch from interlock bracket.

B. REPLACEMENT

1. Insert interlock switch into interlock bracket.
2. Connect interlock harness to interlock switch. Insure locking insert on the switch mates to locking tab on harness.
3. Replace bracket and install securing screw. Ensure fixed drive ground strap is connected to screw.

C. ADJUSTMENT

1. Placement of mounting bracket must be 1 inch away from top cover screw mounting tab. Tighten securing screw. (Refer to figure 3-27).
2. Replace AC cord.
3. Replace top cover.

NOTE: If no power is observed when system power switch is turned on, check interlock switch mounting bracket alignment.

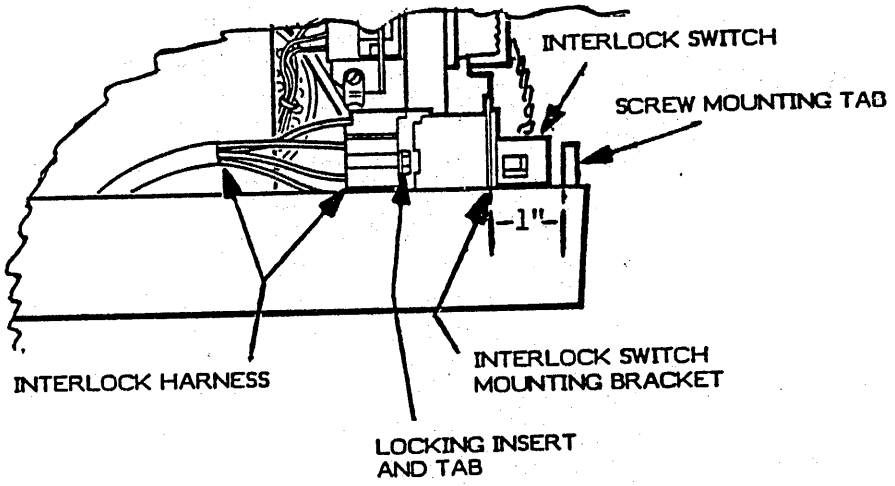

FIG. 3-27 INTERLOCK SWITCH

600P84592

PARTS

IDENTIFICATION

PL 4.1 Display Processor 600P84592

(USO)

ITEM	XEROX PART NO.	DESCRIPTION
1	2S82073	Top Cover Assembly (TSC only)
2	105P80366	Power Supply
3	110P80540	Power On/Off Switch
4	117S80673	Power Cord Assembly (927)
	117S80724	Power Cord Assembly (U05/U03)
5	123P80103	* Monitor (CRT & PWA)
6	140S82702	Brightness Control PWA
7	140S82628	Processor (CPU) PWA (927)
	140S82828	Processor (CPU) PWA (U03/U05)
8	152S24160	Printer Cable (10 feet)
9	152S81238	Signal Harness
11	601S870	2.0 Rom Kit
12	140S82771	Floppy Drive Interface
13	140S82758	Fixed Drive Interface
15	3P80664	Knob
16	116P80768	Contact Strip-Bottom
17	116P80769	Contract Strip-Top
A	99P3049	Fuse 2.5A (Package of 5)

*The monitor PWA is part of Item 5.

(RXO)

ITEM	XEROX PART NO.	DESCRIPTION
1	2S82073	Top Cover Assembly
	2S82110	Top Cover Assy FCC Class B
2	105S80383	Power Supply
3	110P80470	Power On/Off Switch
4	117S80697	Power Cord (E 39)
	117S80729	Power Cord (U04/U06/U44/U45)
5	123P80105	* Monitor (CRT & PWA)
	123P80114	* Monitor (Green CRT)(U44/U45)
6	104S82626	Brightness Control PWA
7	104S82755	Processor PWA Tag #2 (E39) (except Germany)
	140S82774	Processor PWA FCC Class B (E39 (Germany on
	140S82777	Processor PWA (U04/U06/U44/U45)
8	152S24160	Printer Cable
9	152S81238	Signal Harness
10	N/A	Data Label
11	— —	2.0 ROM Kit (US)
12	140S82771	Floppy Drive Interface PWA (U04/U06/U44/U4
13	140S82758	Fixed Drive Interface PWA (U04/U06/U44/U45
14	2S82072	Bottom Cover
	2S82114	Bottom Cover FCC Class B
15	3P80664	Knob
16	116P80768	Contact Strip-Bottom (U04/U06/U44/U45)
17	116P80769	Contract Strip-Top (U04/U06/U44/U45)
A	708W09501	Fuse 1.25A

*The Monitor PWB is part of Item 5.

(USO)

ITEM	XEROX PART NO.	DESCRIPTION
1	2P29832	Keyboard Top Cover
2	4P80154	Foot
3	91P81375	Logo
4	110S80542	Keyboard Assembly
	110S80564	Keyboard Assembly (Alt.)see note
5	152S81237	Keyboard Harness
9	19P80573	Keyboard Mounting Bracket

NOTE: This keyboard will reduce entry errors associated with typing speed, commonly known as keybounce.

(RXO)

ITEM	XEROX PART NO.	DESCRIPTION
1	2P29832	Keyboard Top Cover
2	4P80154	Foot
3	91P81375	Logo
4	110S80552	Keyboard Assy
5	152S81237	Keyboard Harness
6	91P81574	Product Code Label
7	73S22090	UK English Keycap Kit
	73S22091	French Keycap Kit
	73S22092	German Keycap Kit
	73S22093	Dutch Keycap Kit
	73S22094	Italian Keycap Kit
	73S22095	Swedish/Finnish Keycap Kit
	73S22096	Norwegian/Danish Keycap Kit
	73S22097	Spanish Keycap Kit
	73S22098	ASC II Keycap Kit
	73S22830	Swiss French Keycap Kit
	73S22831	Swiss German Keycap Kit
8	2P82033	Keyboard Bottom Cover
9	19P80573	Keyboard Mounting Bracket

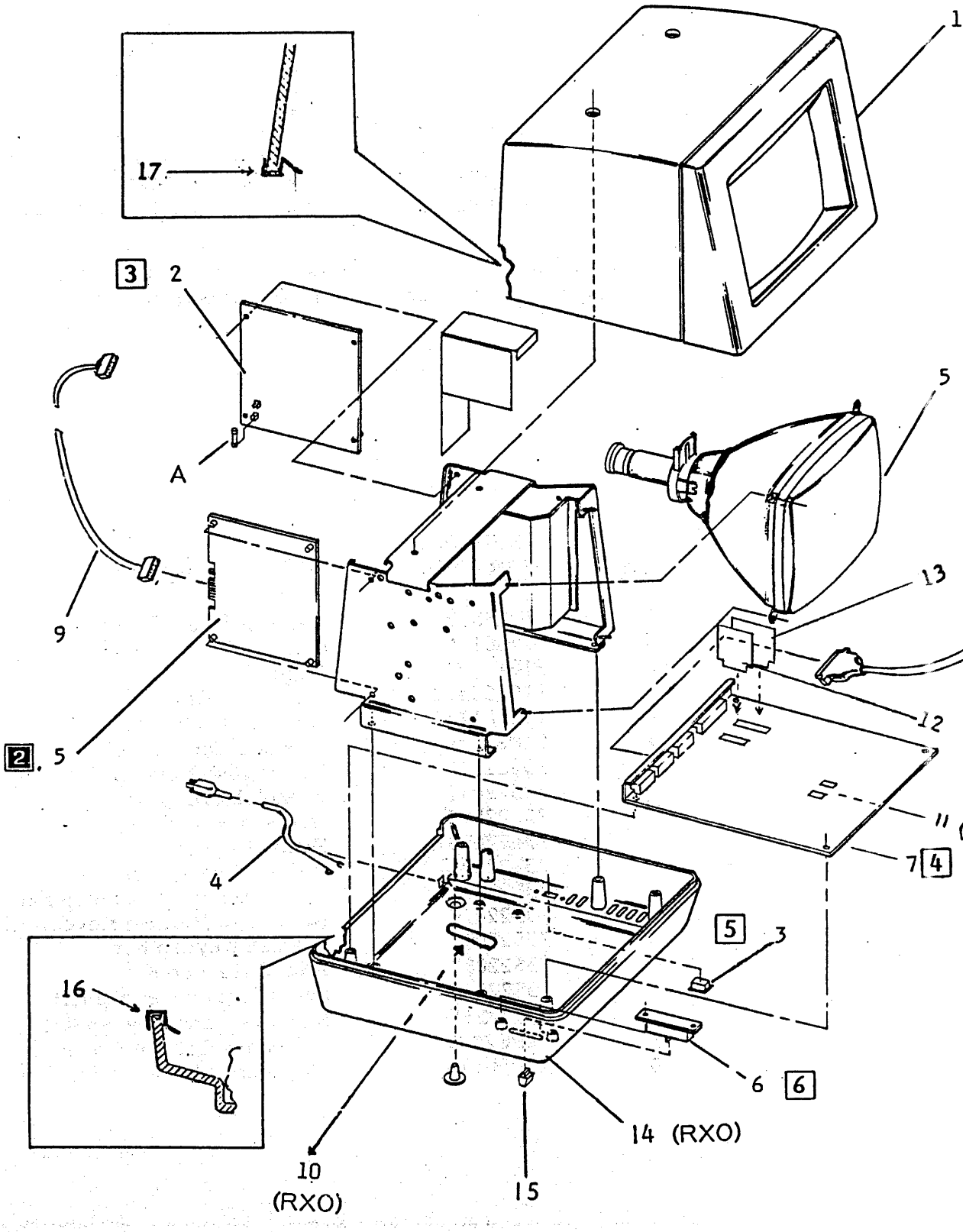
1
17
3
2
A
5
9
13
12
2
5
11
7
4
4
5
3
16
6
6
14 (RXO)
10
(RXO)
15

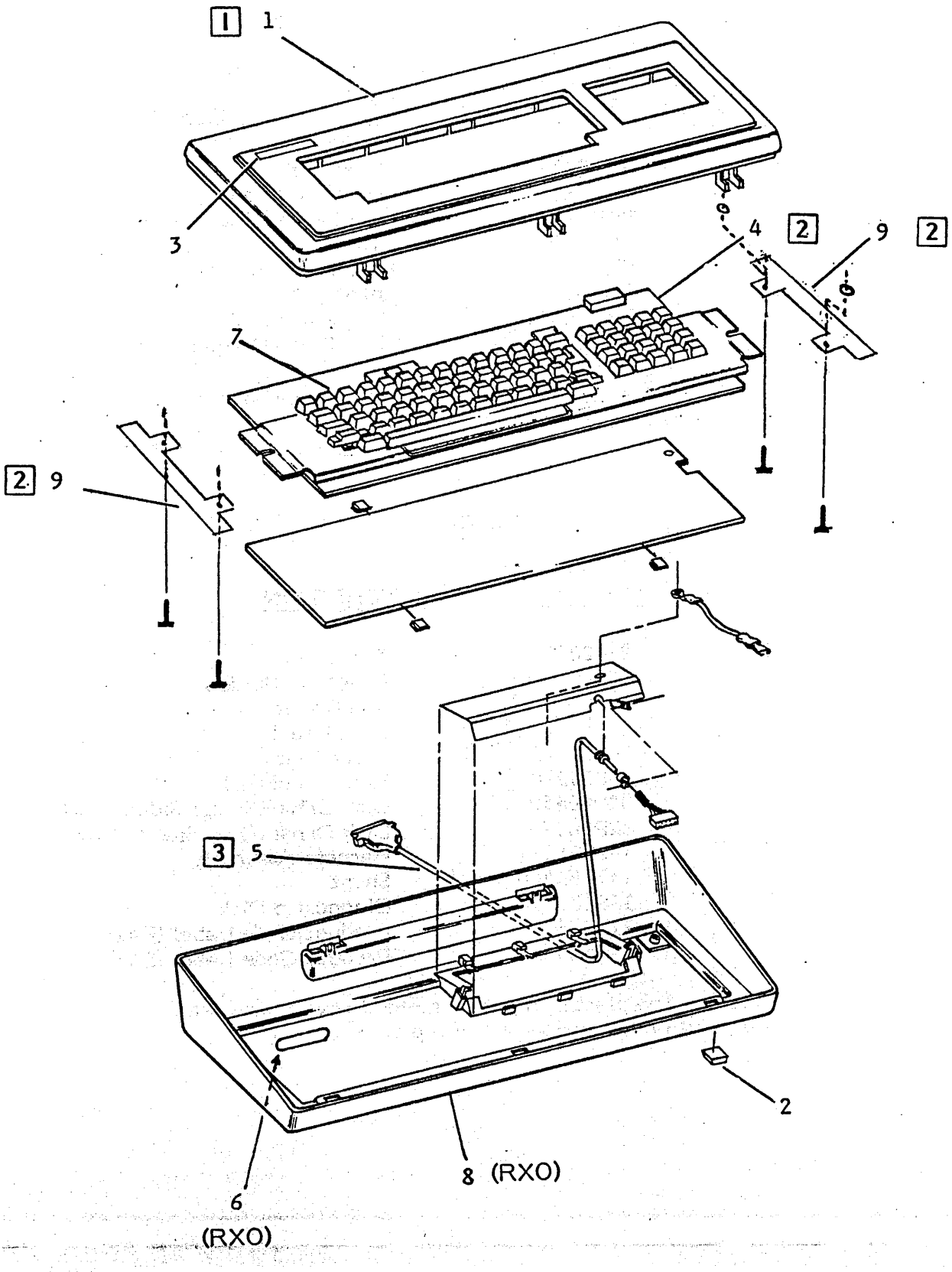
1
1
3
4
2
9
2
7
2
9
3
5
2
8 (RXO)
6
(RXO)

(USO)

ITEM	XEROX PART NO.	DESCRIPTION
1	2S82071	Top Cover (TSC only)
	TBA	Injection Molded Top Cover (TSC only) See Note 1
2	76S20215	Drive Belt
3	601S868	Head Load Pad
4	82P80650	Disk Drive (Single Sided)
	82P80675	Disk Drive (Dual Sided)
5	152S81236	Harness Assembly
6	601S869	Shunt Kit
7	73S80445	Diagnostic Disk
	73S80504	Dual Sided Diagnostic Disk

NOTE 1 - The plastic injection molded cover has a lead base paint on the inside of the cover.

(RXO)

ITEM	XEROX PART NO.	DESCRIPTION
1	2S82071	Top Cover
	TBA	Injection Molded Top Cover See Note 1
2	76S20215	Drive Belt
3	76S20216	Head Load Pad
4	82P80650	Disk Drive (Single Sided) (E41)
	82P80675	Disk Drive (Dual Sided) (E44)
5	152S81265	Harness Assembly
6	133P80440	Shunt
7	130S21204	Diagnostic Disk
8	91P81573	Product Code Label (E41)
	91P81608	Product Code Label (E44)

NOTE 1 - The plastic injection molded cover has a lead base paint on the inside of the top cover.

600P84592

PL 4.3 Disk Drive Assembly (5.25" Single/Dual Sided)

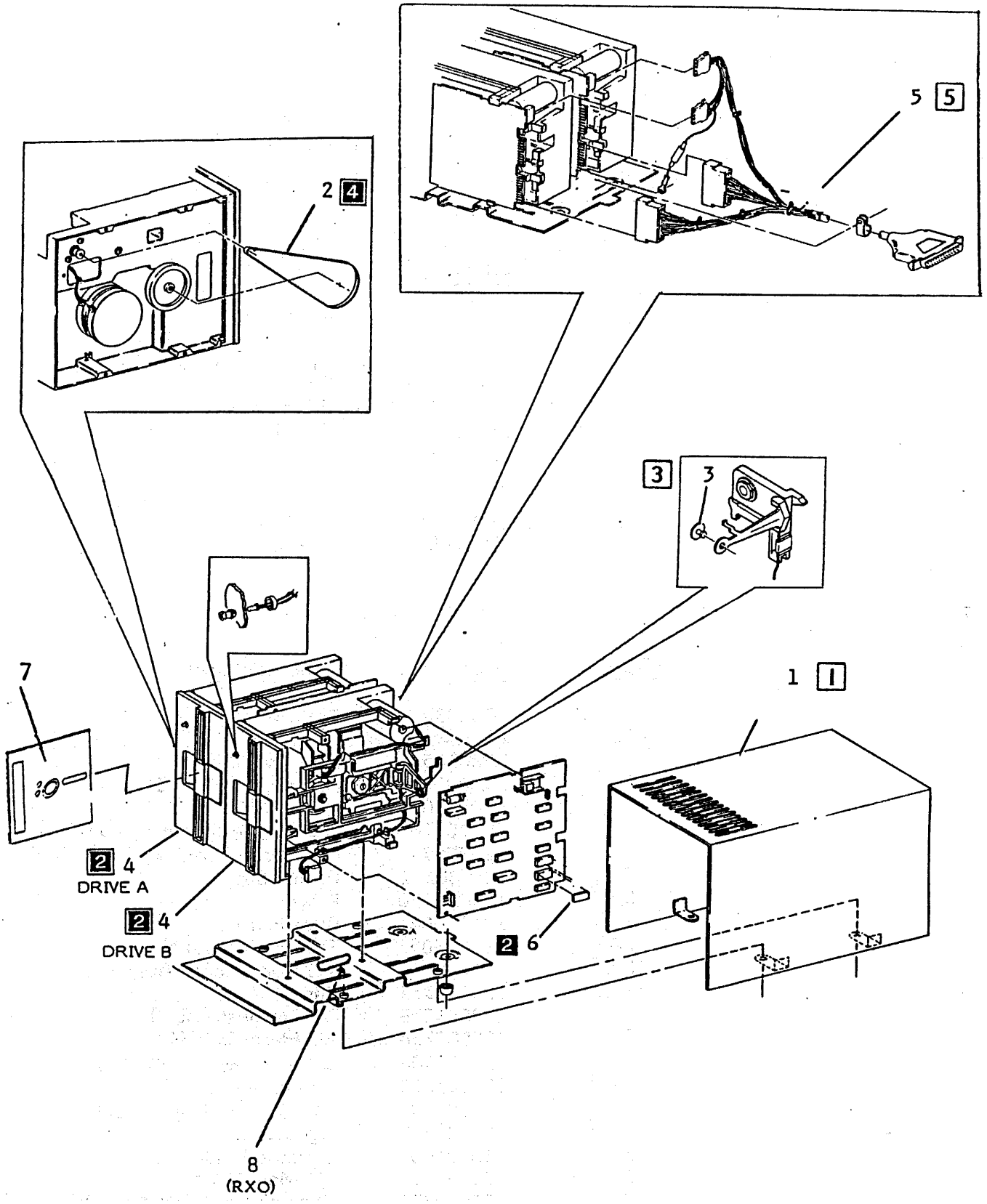

PL 4.4 Disk Drive Assembly (8" Single/Dual Sided) 600P84592

(USO)

ITEM	XEROX PART NO.	DESCRIPTION
1	2P82083	Top Cover (TSC only)
2	601S547	Load Pad (5 per pack)
3	3P80545	Disk Drive Indicator
4	23P80122	Drive Belt (60 HZ)
5	55P80607	Bezel (TSC only)
6	82P80437	Disk Drive (8")SS
	82P80642	Disk Drive (8")DS
7	105P80376	Power Supply
	105P80396	Power Supply (ALT.)
8	110P80470	Power Switch
9	113P1304	Fuse Holder
9A	113P1305	Fuse Holder Cap
10	113S80667	AC Receptacle Assembly
11	127P1290	Fan
12	152S81258	DC Harness
13	152S81259	AC Harness
14	152S81287	Signal Harness
15	73S80446	Diagnostic Disk
	73S80503	Diagnostic Disk (820-II)
16	117P80447	AC Power Cord
17	19P80487	Clamp
19	76S20218	Disk Drive PWA (SS)
A	708W2001	Fuse 5A

(RXO)

ITEM	XEROX PART NO.	DESCRIPTION
1	2P82083	Top Cover
2	601S547	Load Pad (E42) (5 per pack)
3	3P80545	Disk Drive Indicator
4	23P80121	Drive Belt (50 HZ)
5	55P80607	Bezel (USO)
6	82P80676	Disk Drive Single Sided (E42)
	82P80674	Disk Drive Double Sided (E89)
7	105S80382	Power Supply
8	110P80470	Power Switch
9	113P1304	Fuse Holder
9A	113P1305	Fuse Holder Cap
10		AC Receptacle Assy (USO) (RXO P/O Item
11	127S80376	Fan
12	152S81258	DC Harness (USO)
13	152S81268	AC Harness (E42)
	152S81308	AC Harness Tag #1 (E42)
	152S81292	Ac Harness (E89)
	152S81307	AC Harness Tag #1 (E89)
14	152S81287	Signal Harness
15	130S21804	Diagnostic Disk
16	152S82370	UK Mains Lead
	152S92371	European VDE Mains Lead
	152S92787	Swiss Mains Lead
17	19P80487	Clamp
18	N/A	Data Label (E42)
	N/A	Data Label (E89)
19	76S80218	Disk Drive PWA
A	708W01601	Fuse 2.0A

600P84592

PL 4.4 Disk Drive Assembly (8" Single/Dual Sid

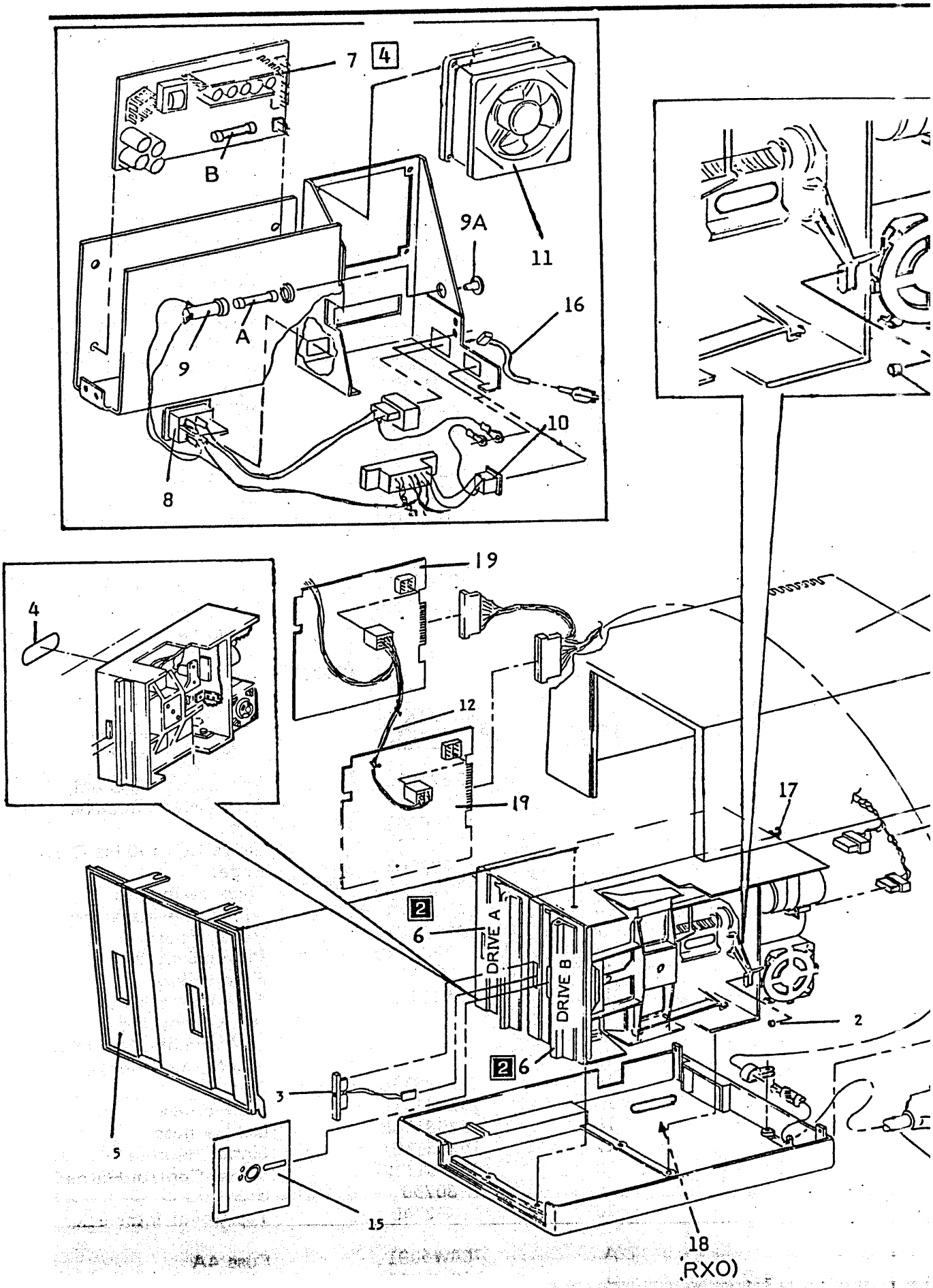

PL 4.5 Disk Drive Assembly (8" Fixed Drive) 600P84592

(USO)

ITEM	XEROX PART NO.	DESCRIPTION
1	2P82107	Top Cover (TSC only)
2	3P80545	Disk Drive Indicator
3	17P80202	Foot
4	23P80122	Drive Belt (60 Hz D.S.)
5	56P80164	Bezel
6	73S80503	Diagnostic Disk
7	82P80642	Disk Drive Assembly 8" D.S.
8	105P80403	Power Supply
9	110P80470	Power Switch
10	113P1304	Fuse Holder
11	113P1305	Fuse Holder Cap
12	113P80667	AC Receptacle Assembly
13	117P80447	AC Power Cord
14	127P1290	Fan
15	152S81301	AC Harness
16	152S81302	DC Harness
17	152S81303	Signal Harness
18	152S81322	Signal Control Harness
19	1P80730	Base (TSC only)
20	110P2340	Top Cover Interlock
A	708W2001	Fuse 5A
B	99P3049	Fuse 2.5A (Package of 5)
C	26P80459	Top Cover Interlock Screw

(RXO)

ITEM	XEROX PART NO.	DESCRIPTION
1	2P82107	Top Cover (TSC only)
2	3P80545	Disk Drive Indicator
3	17P80202	Foot
4	23P80121	Drive Belt (50 Hz D.S.)
5	56P80164	Bezel
6	73S80446	Diagnostic Disk
7	82P80674	Disk Drive Assembly (8"D.S.)
8	105S80409	Power Supply
9	110P80470	Power Switch
10	113P1304	Fuse Holder
11	113P1305	Fuse Holder Cap
12		AC Receptacle Assembly Part of Item 15
13		See PL 4.4 item 16
14	127S80376	Fan
15	152S81310	AC Harness
16	152S81302	DC Harness
17	152S81303	Signal Harness
18	152S81322	Signal Control Harness
19	1P80730	Base
20	110P2340	Top Cover Interlock
A	708W5001	Fuse 4A
B	708W09501	Fuse 1.25A
C	26P80459	Top Cover Interlock Screw

600P84592

PL 4.5 Disk Drive Assembly (8" Fixed Drive)

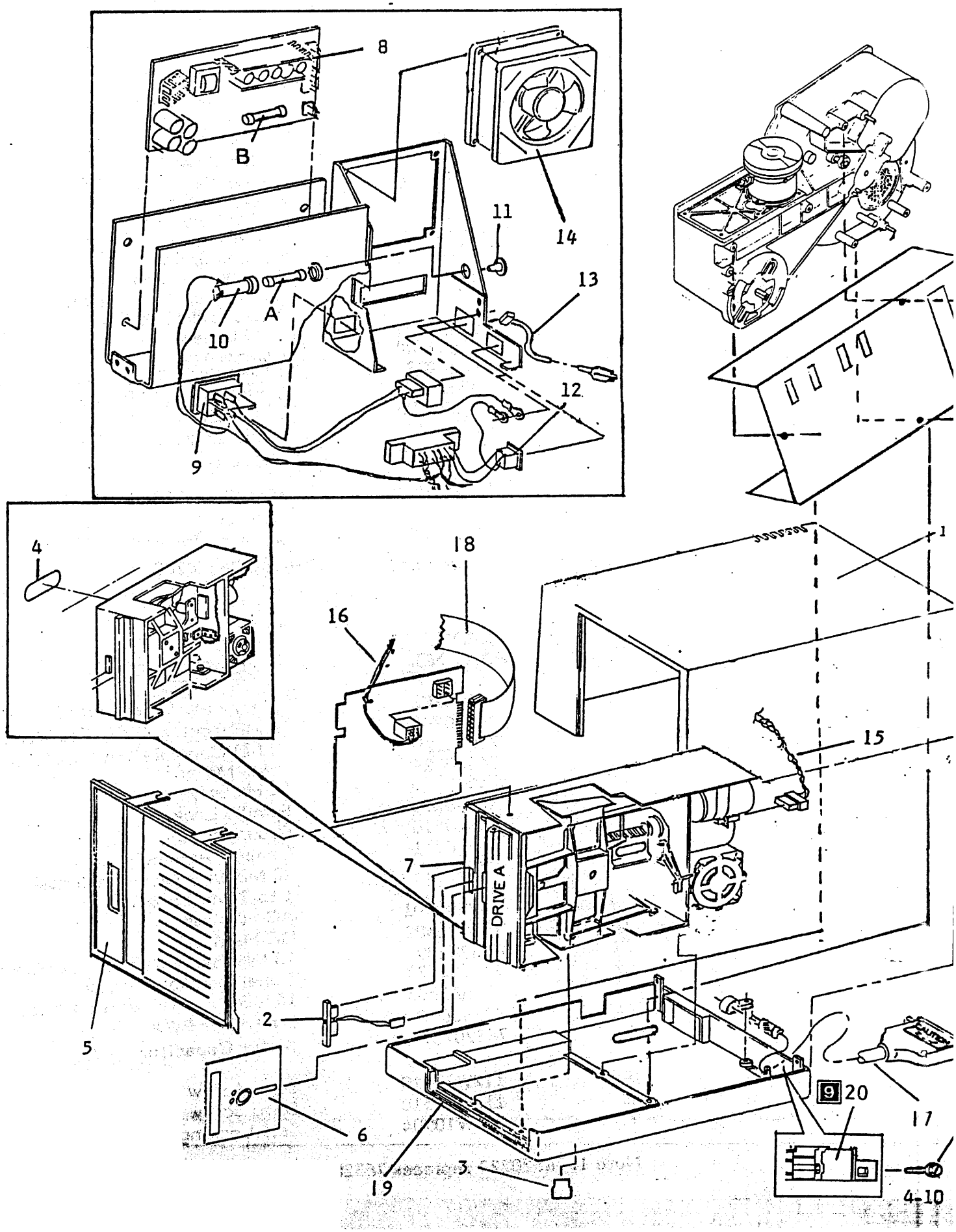

(USO)

ITEM	XEROX PART NO.	DESCRIPTION
1	76S20201	Stepper PWA(See Note 1)
2	76S20202	10 MB Control PWA (See Note 1)
	76S20229	10 MB Control PWA (See Note 1)
3	76S20204	Drive Motor
4	76S20205	60 Hz Drive Belt
5	76S20208	Spindle Lock
6	76S20210	Ground Spring
7	76S20211	Damper Assembly
8	82P80661	10 MB Disk Drive (includes- 1 to 7 and 11 to 13)
9	152S81301	AC Harness
10	152S81302	DC Harness
11	76S20209	10 MB PWA Interconnect Harness
12	152S81322	Signal Control Harness
13	152S81305	10 MB Data Transfer Harness
14	82S80692	Fixed Drive Controller PWA
15	(TSC only)	Capacitor
A	112W24410	Sems Screw (6-32 x 1/4)
B	112W36510	Sems Screw (8-32 x 5/16)
C	220W10904	Self-Locking Nut (8-32)

Note 1: 76S20229 replaces 76S20201 and 76S20202.

(RXO)

ITEM	XEROX PART NO.	DESCRIPTION
1	76S20201	Stepper PWA (See Note 1)
2	76S20202	10 MB Control PWA (See Note 1)
	76S20229	10 MB Control PWA (See Note 1)
3	76S20226	Drive Motor
4	76S20206	50 Hz Drive Belt
5	76S20208	Spindle Lock
6	76S20210	Ground Spring
7	76S20211	Damper Assembly
8	82P80672	10 MB Disk Drive (includes- 1 to 7 and 11 to 13)
9	152S80301	AC Harness
10	152S81302	DC Harness
11	76S20209	10 MB PWA Interconnect Harness
12	152S81322	Signal Control Harness
13	152S81305	10 MB Data Transfer Harness
14	82S80692	Controller PWA
15	76S20227	Motor Capacitor
A	112W24410	Sems Screw (6-32 x 1/4)
B	112W36510	Sems Screw (8-32 x 5/16)
C	220W10904	Self-Locking Nut (8-32)

Note 1: 76S20229 replaces 76S20201 and 76S20202.

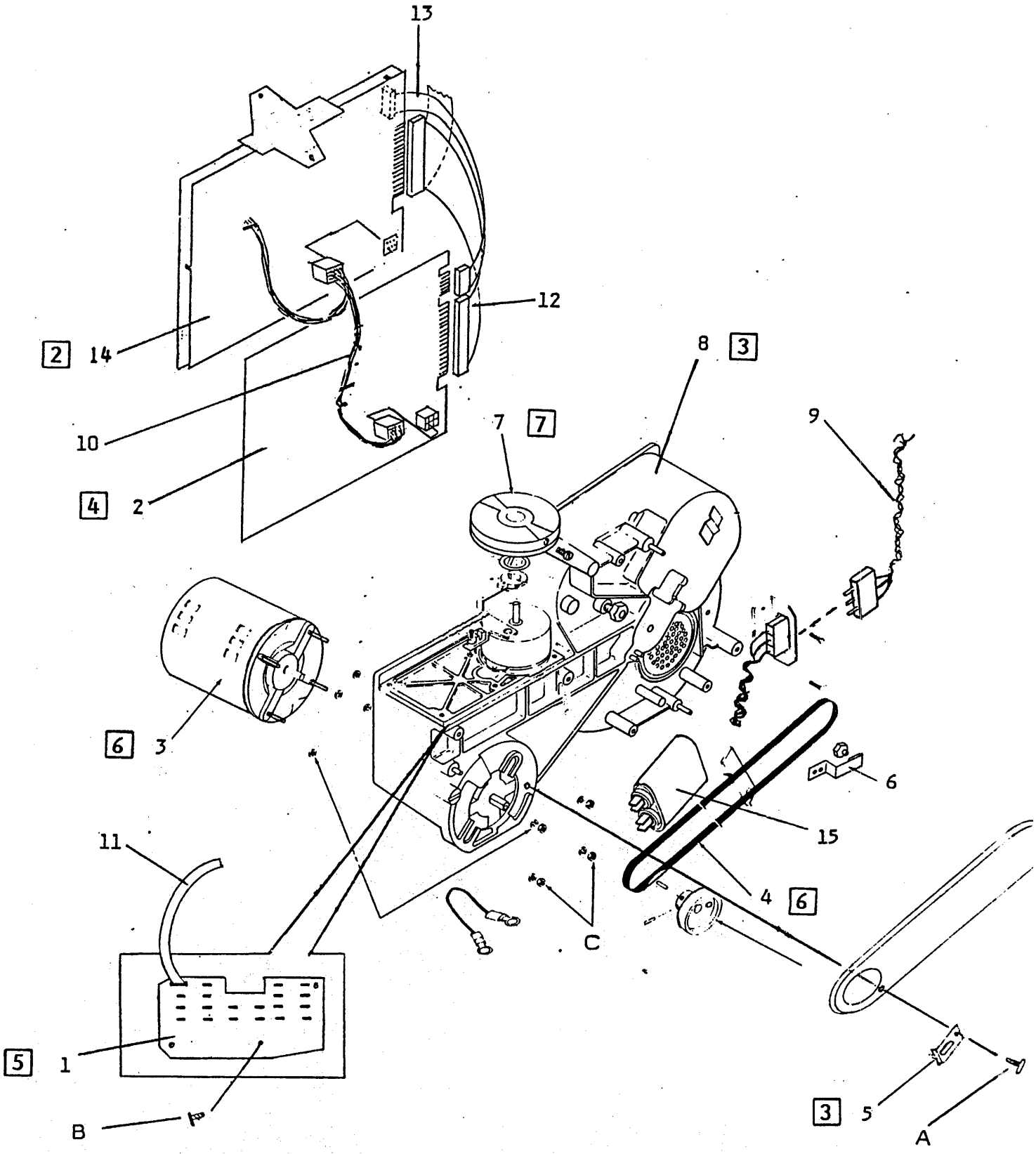
13
12
2 14
10
4 2
8 3
7 7
9
6 3
6
15
11
4 6
C
5 1
B
3 5
A

THIS PAGE INTENTIONALLY LEFT BLANK

THIS SECTION DOES NOT APPLY

TROUBLESHOOTING

6.1 INTRODUCTION TO TROUBLESHOOTING

The XEROX 820/820-II is to be serviced using three major fault isolation sequences.

1. Performance of the LEVEL 1 CHECKOUT procedure, which includes visible indications and running Exercisers.

2. Depending on the information obtained in LEVEL 1 CHECKOUT, you will be directed to access one or more of the following:

   a. Component/Assembly replacement.

   b. LEVEL 2 CHECKCHART procedures.

   c. Exercisers.

3. If corrective action does not result in solving the problem, call for assistance from the TSC. (USO)

The Check Charts were written with the knowledge that, if a certain visible indication occurs, several areas are eliminated as possibilities. For this reason, it is absolutely necessary that the LEVEL 1 CHECKOUT procedure be followed in the sequence given and that no exceptions be made. For example, if you miss a visible indication and later an error occurs, the CHECKCHARTS will have assumed you saw the visible and it was correct,therefore some areas which could cause the error will not be checked. The results will be the check charts will not be effective. If an error does not occur, the performance of the Level 1 Checkout will have eliminated most of the possibilities and the remaining possibilities can be checked quickly.

If you have spent a reasonable amount of time (determined by local management) and do not see an immediate correction to the problem, you should request assistance from the TSC. The TSC is your support in solving the problem. (USO)

6.2 LEVEL 1 CHECKOUT EXPLANATION

Figure 6-1 shows a sample of the LEVEL 1 CHECKOUT procedure. Notice the three columns.

1. Procedure - This column details the action(s) required to perform the step.

2. Visible Indications - Indications in this column identify visible indicators of properly operating system. Each of these visuals must be checked and verified in the sequence given. If the sequence is not followed, the LEVEL 2 access cannot be depended upon to properly isolate the faulty component.

3. Level 2 Access - This column identifies the corrective action to take if one of the visible indications do NOT occur, is incorrect, or if a Fault Code is reported, a number in this column identifies the LEVEL 2 CHECK CHART procedure to use. In some cases, you may either be directed to see the replace a part or you may be directed to continue to the next visible listed in the Level 1 Check Chart. In other cases, you may be directed to "See NOTE." The NOTE will be found following the statement.

All notes within the LEVEL 1 must be followed. They tell you what to do during or after the LEVEL 1 is performed.

A visible indication of the LEVEL 1 will reference you to one or more of the following:

a. LEVEL 2 CHECK CHART procedures.

b. Component Replacement.

STEP PROCEDURES	VISUAL INDICATORS	LEVEL 2 ACCESS
(1) 1. Check for obvious problem. Repair if solution is apparent (refer to repair procedures.)	(2)	(3)
2. Remove any floppy discs from drives.		
3. Turn system OFF.		
4. Wait 10 seconds then turn system ON.	After 10 seconds ...XEROX is displayed.	Procedure 1.0
5. Insert diagnostic disc in the left hand disc drive.		
6. Type A on the keyboard.	A displayed on the screen	Keyboard Processor PWB Keyboard Harness

Figure 6-1 Sample LEVEL 1 CHECKOUT

6.3 LEVEL 2 CHECK CHART EXPLANATION

Figure 6-2 is a sample of a LEVEL 2 CHECK CHART. Notice the different column headings.

1. Within this box is the number and name of the Level 2 procedure.

2. Step - This column lists the number for each step of the procedure. Not all steps will be performed. Only perform those steps necessary to isolate the faulty components(s).

3. Procedure - This column describes the set-up required, if any. If it is a voltage, the tolerance is given.

   All AC voltages will be written as VAC, and all DC voltages will be written as VDC. Always turn the system power off when disconnecting/connecting plugs or removing/inserting PWA's. DC voltage are to be assumed positive unless a minus (-) is shown prior to the voltages.

4. Test Point - The column identifies how or where to check the procedure statement. If a voltage reading is to be made, the first entry is for the RED or (+) lead and the second entry is for the BLACK or (-) lead. If no second entry exists, the BLACK lead must be connected to any good machine frame ground (not on painted or non-metallic surfaces). Chapter 4, (PARTS LIST) or Chapter 7, (PLUG/JACK LIST) can be used to locate the component or plug/jack where the test is to be made.

5. Correct Indication - If the voltage or visual observed was CORRECT or occurred as stated in the procedure; this column will either direct you to the next place to continue troubleshooting or it will direct you to replace a component or perform an adjustment.

6. Incorrect Indication - If the voltage or visual observed was INCORRECT or did NOT occur as stated in the procedure; this column will either direct you to the next place to continue troubleshooting or it will direct you to replace a component or perform an adjustment. These steps must be followed as listed.

6.5 Level 2 Check Chart Procedures 600P83800

STEP	PROCEDURE (1)	TEST POINT (5)	INDICATION CORRECT	INDICATION INCORRECT
1.0	... XEROX IS NOT DI... ED			
1.	Measure voltage at input of Power Supply, voltage should be within 90 and 130 VAC. (USO) (2) 190-242VAC or 215-264VAC (RXO) (3)	P1 1-3 (4)	Step 2	Check wiring and S-1 between power cord and power supply. (6)
2.	Measure voltage at output of Power Supply, voltage should be within 4.25 and 5.25 VDC	P5 - 4 (-) P5 -8 (+)	Step 3	Power Supply
3.	Measure Voltage at output of Power Supply, voltage should be 12 VDC.	P5 - 4 (-) P5 - 2 (+)	Step 4	Power Supply
4.	Check Brightness Control Potentiometer: When moving Potentiometer, Voltage should go between OVDC and 150 VDC	P1 - 3 (-) P1 - 2 (+)	Step 5	Monitor Brightness Control

Figure 6-2 Sample LEVEL 2 CHECK CHARTS

STEP PROCEDURES	VISUAL INDICATORS	LEVEL 2 ACCESS
1. Check for obvious problem. Repair if solution is apparent (refer to repair procedures.)		
2. Remove any floppy discs from drives.		
3. Turn system OFF.		
4. Wait 10 seconds then turn system on.		
After 10 seconds	NOTE: Display for 820 Systems ...XEROX 820 VER.X.X... A-BOOT SYSTEM T-TYPEWRITER	Procedure 1.0
	NOTE: Display for 820 II System 820-II VER. XX 1982 XEROX CORP. L - LOAD SYSTEM H - HOST TERMINAL T - TYPEWRITER	Procedure 1.0
5. Insert diagnostic disc in the left disc drive.		
6. NOTE: This step does not apply to the Fixed Drive. Insert initialized disc in right disc drive.		
7. Type A for 820 Type L A for 820-II	A displayed on the screen L A displayed on the screen	Keyboard Daughter PWA (820 II Only) Processor PWA Keyboard Harness
8. NOTE: Do not press any key(s) while diagnostics are running, after pressing the return key, unless instructed to do so Press the RETURN key	NOTE: Display for 820 Systems COPYRIGHT (C) 1981, XEROX CORP. CP/M REG. TM X.X DI X.X (Serial No.) NOTE: Display for 820 II System 820-II XEROX 60K CP/M VER. XX XXX.	Procedure 2.0 (Procedure 6.0 for Fixed Drive System)
NOTE: During the remainder of Level 1, if at any time a disc error is displayed, perform Procedure 3.0. This note does not apply to the QDISK Procedures.	Error Message Displayed	Procedure 3.0
9. Observe the visual indicators while the following tests are running and respond accordingly.		
o MTEST 0001	MAP OF TESTED MEMORY Passes complete = 0001; Count of Error Bytes = 0000	Processor PWA
o MTEST2	MAP OF TESTED MEMORY Passes complete = 0001 Count of Error Bytes = 0000	Processor PWA

The data in this column will remain the same for all systems.

The data in these columns will vary from system to system but the format will remain the same.

```
1000 78 C3 F3 0D E1 F1 CA 28 0E 23 22 B9 0F EB 21 A8 x......(.#"...!.
1010 06 4E 23 46 CD 57 08 DA 28 0E CD C8 0D 2A 4A 0F .N#F.W..(....*J.
1020 EB 3E 82 B7 37 C3 85 08 FB 2A 4D 0F 7C B5 CA 4E .>..7....*M.|..N
1030 0E 2B 22 4D 0F CD 1F 0C C2 4E 0E 3A 4C 0F B7 C2 .+"M.....N.:L...
1040 48 0E CD 85 0E C3 85 08 CD 44 0D C3 85 08 CD C8 H........D......
1050 0D 3E 2A CD C7 0B 2A B9 0F CD 93 09 D2 62 0E 22 .>*...*......b."
1060 0C 00 CD 2E 0C 2A B7 0F 22 5D 0F C3 FE 06 11 0D .....*.."]......
1070 00 21 2F 0F 7E A0 23 BE 23 CA 81 0E 14 1D C2 74 .!/.~.#.#......t
1080 0E 5A 16 00 C9 2A B9 0F 46 23 E5 CD 6E 0E 21 49 .Z...*..F#..n.!I
1090 0F 73 21 9C 0E 19 19 5E 23 56 EB E9 B8 0E E0 0E .s!....^#V......
10A0 B8 0E E0 0E BE 0E F2 0E 04 0F 26 0F 26 0F 23 0F ..........&.&.#.
10B0 23 0F 19 0F 26 0F 14 0F CD CE 0E C2 29 0F CD D9 #...&.......)...
10C0 0E C3 29 0F 3A A8 06 BB C0 3A A9 06 BA C9 C1 E1 ..).:....:......
10D0 5E 23 56 23 E5 C5 C3 C4 0E 2A B5 0F 5E 23 56 C9 ^#V#.....*..^#V.
10E0 CD CE 0E CA ED 0E C1 C5 3E 02 C3 2B 0F D1 D5 C3 ........>..+....
10F0 29 0F 78 FE FF C2 FC 0E AF C3 2D 0F E6 38 5F 16 ).x.......-..8_.
```

Figure 1-1 Disc Data Log

STEP PROCEDURES	VISUAL INDICATORS	LEVEL 2 ACCESS
o GDISK Disk test Read/Write test Random seek test Read Write test	0 Read/Write errors detected 0 Seek errors detected	Procedure 7.0
NOTE: On 5.25" disc drives only if an initialized disc was not inserted in drive B, a bios and drive not ready will be displayed. To continue test, press the CTRL key and type CC. The screen will display a Bdos Err On B: Select will be displayed.		
NOTE: If printer is not ON/CONNECTED, test will stop, after this step.		
o TERM Diagnostics II V1.1 Terminal test	Test patterns look normal on the screen	Procedure 4.0
o PRINTER TEST Diagnostics II - Printer Exerciser.v1.6 (630 only)	Printer test pattern is normal. Printer inoperative.	Printer Service Manual Step 11

DOUBLE SIDE DISK TEST

5.25" DISC DRIVE

10. Reset machine when printer test is complete and leave diagnostic disc in drive A.

A. Enter in the following from the keyboard:

RØ 4F 1 1ØØØ Press RETURN 1ØØØ — First Mem Address that disc Data is stored 1 — Sector Address 4F — Track Address RØ — Drive Address	Memory address 1000-10F0 containing disc DATA will be displayed on the screen in the same format as Figure 1.	Left Drive

B. NOTE: This test drive B of A Double sided disc only.

Enter in the following from the keyboard R1 4F 1 1ØØØ	Memory Address 1000-10F0 containing disc data will be displayed on the screen in the same format as Figure 1.	Right Drive

STEP PROCEDURES	VISUAL INDICATORS	LEVEL 2 ACCESS
8" DISC DRIVE		
Reset machine when printer test is complete and leave diagnostic disc in drive A.		
A. NOTE: This will test the second side of a double sided disc. N/A to single side disc		
Enter in the following from the Keyboard RØ 4D 1 1ØØØ	Memory Address 1000-10F0 containing disc data will be displayed on the screen in the same format as Figure 1.	Left Drive
B. NOTE: This test drive B. of A double sided disc only.		
Enter in the following from the keyboard R1 4D 1 1ØØØ	Memory Address 1000-10F0 containing disc will be displayed on the screen in the same formatt as Figure 1.	Right Drive
FIXED DRIVE ASSEMBLY		
Reset machine when printer test is complete and leave diagnostic disc in drive A.		
A. NOTE: This test the second side of drive A.		
Enter in the following from the keyboard RØ 4D 1 1ØØØ	Memory Address 1000-10F0 containing disc data will be displayed on the screen in the same format as Figure 1.	Left Drive
B. Enter the following from the keyboard R4 1 1F 1ØØØ	Memory Address 1000-10F0 containing disc data will be displayed on the screen in the same format as Figure 1.	Procedure 7 Step 2.
R4 1 3F 1ØØØ	Same as Step B.	Procedure 7 Step 2.
R4 1 5F 1ØØØ	Same as Step B.	Procedure 7. Step 2.
R4 1 7F 1ØØØ	Same as Step B.	Procedire 7 Step 2.

STEP PROCEDURES	VISUAL INDICATORS	LEVEL 2 ACCESS
11. PRINTER LOOPBACK TEST		
Turn system power off.		
Install loopback tool on Processor printer connector.		
Turn system power on.		
ENTER O∅5 D5 press RETURN.		
ENTER I∅5 press RETURN.	∅5 D5	Processor PWA
Press space bar.		
ENTER O∅5 2A press RETURN.		
ENTER I∅5 press RETURN.	∅5 2A	Processor PWA
Press space bar.		
ENTER O∅C ∅7 press RETURN.		
ENTER O∅5 D5 press RETURN.		
ENTER I∅5 press RETURN.	∅5 D5	Processor PWA
Press space bar.		
ENTER O∅5 2A press RETURN.		
ENTER I∅5 press RETURN.	∅5 2A	Processor PWA

If Printer Loopback Test is good, high probability 820 Processor is not at fault. Use your P1/1730 Service Manual to repair Printer.

12. COMM. LOOPBACK TEST		
Turn system power off.		
Install loopback tool on Processor Comm. connector.		
Turn system power on.		
ENTER O∅6 ∅4 press RETURN.		
ENTER O∅6 45 press RETURN.		
ENTER O∅6 ∅1 press RETURN.		
ENTER O∅6 ∅∅ press RETURN.		
ENTER O∅6 ∅3 press RETURN.		
ENTER O∅6 41 press RETURN.		
ENTER O∅6 ∅5 press RETURN.		
ENTER O∅6 2A press RETURN.		
ENTER O∅∅ ∅5 press RETURN.		
ENTER O∅4 D5 press RETURN.		
ENTER I∅4 press RETURN.	∅4 D5	Processor PWA
Press space bar.		

cont.

STEP PROCEDURES	VISUAL INDICATORS	LEVEL 2 ACCESS
ENTER O∅4 2A press RETURN.		
ENTER I∅4 press RETURN.	∅4 2A	Processor PWA
Press space bar.		
ENTER O∅∅ ∅7 press RETURN.		
ENTER O∅4 D5 press RETURN.		
ENTER I∅4 press RETURN.	∅4 D5	Processor PWA
Press space bar.		
ENTER O∅4 2A press RETURN.		
ENTER I∅4 press RETURN.	∅4 2A	Processor PWA

If Comm. Loopback Test is good, high probability 820 Processor is not at fault.

STEP	PROCEDURE	TEST POINT	INDICATION CORRECT	INDICATION INCORRECT
1.0	... XEROX IS NOT DISPLAYED			
1.	Measure voltage at input of Power Supply, Voltage should be within 90 and 130 VAC	P1 1-3	Step 2	Verify AC Source Voltage Check wiring and S-1 between power cord and power supply. NOTE: If processor is plugged into Drive Box check Interlock Switch on Fixed Drive and fuse F-1 on rear of box.
2.	Measure voltage at output of Power Supply, voltage should be within 4.75 and 5.25 VDC	P5 - 8 P5 - 4	Step 3	
3.	Measure Voltage at output of Power Supply, voltage should be 12 VDC.	P5 - 2 P5 - 4	Step 4	Power Supply
4.	Check Brightness Control Potentiometer: PWA When moving Potentiometer, Voltage should go between OVDC and 150 VDC	P1 - 2 P1 - 3 (Brightness Control PWA)	Step 5	Monitor PWA Brightness Control
5.	Measure video output voltage should be .1 VDC to .4VDC	J1 - 8 J1 - 1 (Monitor PWA)	Step 6	Verify shunt configuration figure 3.8 Processor PWA
6.	Measure horizontal sync, voltage should be 1.8 VDC to 3.0 VDC	J1 - 6 J1 - 1 (Monitor PWA)	Step 7	Processor PWA
7.	Measure vertical sync, voltage should be 3.8 VDC to 5.2 VDC	J1 - 9 J1 - 1	Step 8	Processor PWA
8.	Increase brightness control on monitor PWA until raster is visible.	Raster visible?	Daughter PWA Processor PWA	Monitor
2.0	COPYRIGHT (C) 1981, XEROX CORP.XEROX NOT DISPLAYED			
1.	Depress Reset Switch.			
2.	Insert Diagnostic Disc in right drive.			
3.	Type B and press RETURN NOTE: On 820-II, type LB and return. COPYRIGHT (C) 1981, XEROX CORPORATION CP/M REG. TM X.X DI X.X (Serial No.)			
	bios select error drive not ready	Visual	Clean Heads on Left Disc Drive Check motor speed 3.3.4 5.25" only (Left disc load pad single side drives only) Left disc drive	Verify Diagnostic Disk Procedure 5

STEP	PROCEDURE	TEST POINT	INDICATION CORRECT	INDICATION INCORRECT
	3.0 ERROR IS DISPLAYED			
	NOTE: Clean drive heads repeat Level 1 checkout.			
	5.25" Disc Drive			
1.	Reconfigure (strap) the left drive for physical drive B, and the right drive for physical drive A by swapping the shunts and installing the resistor network on the left drive.		Verify Diskette Check motor speed 3.3.4 Load Pad (Single side only) Left disc drive	Processor PWA Daughter PWA Signal Harness (820-II only)
2.	Repeat Level 1 checkout thru Step 9 with the Diagnostic Disc in the right disk drive.			
	8" Floppy Drive			
1.	Move DS1 Jumper to DS2 on drive "A". Move DS2 Jumper to DS1 on drive "B".		Verify diskette Load pad (single side only) Left disc drive	Daughter PWA (820 II only) Processor PWA Signal Harness
	Repeat Level 1 checkout thru Step 9 with the Diagnostic Disc in the right disk drive.			Daughter PWA (820-II only) Processor PWA Signal Harness
	FIXED DISC ASSEMBLY			
1.	Reset machine and enter in the following from the keyboard: R4 Ø Ø 1ØØØ press RETURN	Memory Address 1000-10F0 containing disc data will be displayed on the screen in the same format as Figure 1.	Verify Diskette Left Drive Signal Control Harness	Daughter PWA (820-II only) Processor PWA Fixed Controller PWA Signal Harness
	4.0 TEST PATTERNS NOT CORRECTLY DISPLAYED			
1.	Entire Screen is distorted.	Visual	Adjust moniter PWA 3.1.2	Processor PWA
	5.0 COPYRIGHT (C) 1981, XEROX CORP. NOT DISPLAYED			
	5.25" DISK DRIVE			
1.	Measure voltage at input of Disc Drive, voltage(s) should be:			

STEP	PROCEDURE	TEST POINT	INDICATION CORRECT	INDICATION INCORRECT
a)	12VDC	P/J2-1 P/J2-2	step b	Check wiring between Processor PWA and drive.
b)	4.75 to 5.25VDC	P/J2-4 P/J2-3	Step 2	Check wiring between Processor PWA and drive.
2.	Power down, then disconnect signal harness from Disc Drive (B). Power up and insert Diagnostic Disc in disc Drive (A), type A and press RETURN.	©COPYRIGHT displayed MTEST RUNS	Disc Drive(B) Signal Harness.	Step 3
3.	Power down, and reconnect drive (B), disconnect signal harness from Disc Drive (A). Power up and insert diagnostic disk in Disc drive (B), type B and press RETURN. NOTE: If 820-IIsystem, type LB and press return.	COPYRIGHT BIOS select ERROR drive not ready displayed.	Disc Drive (A) Signal Harness	Daughter PWA (820-II only) Processor PWA Signal Harness
8" DISK DRIVE				
1.	Measure input voltages at disk drive (3.4.4) figure 3-24 .		step 2	Check Fuse drive power supply
2.	Power down, and disconnect signal harness from Disk Drive (B). Power up and insert diag.-nostic disc in drive (A), type A and press return.	COPYRIGHT displayed	Disk Drive(B) Signal Harness	step 3
3.	Power down and remove T3, T4, T5,T6 from disk Drive (A), install them on Disk Drive (B). Reconnect Disk Drive (B), disconnect signal harness from Disk Drive (A). Power up insert diagnostic disc in disk drive (B), type B and press return. NOTE: If 820-IIsystem, type LB and press return.	COPYRIGHT BIOS select ERROR drive not ready displayed.	Head load pad Disk Drive (A) Signal Harness	Daughter PWA (820-II only) Processor PWA Signal Harness
6.0	**XEROX CP/M 60K VXX NOT DISPLAYED**			
1.	Verify interlock engage. Refer to Procedure 3.5.9.			
2.	NOTE: This manually reads data from the fixed drive. Depress reset switch and type in: R4 Ø Ø 1ØØØ press RETURN	Memory Address 1000-10F0 containing disc data will will be displayed on the screen in the same format as Figure 1.	Clean Left disc heads Verify diagnostic disc Left disc Drive	Step 3

STEP	PROCEDURE	TEST POINT	INDICATION CORRECT	INDICATION INCORRECT
3.	Power off and disconnect power cord. Remove top cover (procedure 3.5.1) Disconnect P1 from 10 meg Byte board. Reconnect power cord, ingage top cover interlock and power on. Insert diagnostic disc in left drive. Type LA and press RETURN.	Xerox CP/M 60K VER. XX Displayed	10MB Control PWA	Step 4
4.	NOTE: This manually reads the fixed disc.			
	Remove disc from left drive Power off and unplug power cord. Reconnect PJ-1 on 10 Meg Byte control PWA. Disconnect PJ-1 on 8" drive. Reconnect power cord and power on. Reset machine and type in: R4 Ø Ø 1ØØØ	Memory Address 1000-10F0 containing disc data will be displayed on the screen in the same format as Figure 1.	Left disc Drive	Power System down. Reconnect PJ-1 to left drive and proc-ede to step 5.
5.	Measure voltage at output of the disc drive power supply connector PJ-3, voltage should be -5VDC ± .25 vdc.	J3-1 J3-6	Step 6	Check fuse F1 Drive power supply
6.	Measure voltage A1 output of the disc drive power supply connector PJ-3, voltage should be +5VDC ± .25vdc.	J3-8 J3-4	Step 7	Check fuse F1 Drive power supply
7.	Measure voltage at output of the disc drive power supply connector PJ-3, voltage should be +24vdc ± 1.2 vdc	J3-2 J3-5	Step 8	Check fuse F1 Drive power supply
8.	Measure voltage at output of the disc drive power supply connector PJ-3, voltage should be + 5vdc ± .25 vdc.	J3-9 J3-4	Step 9	Check fuse F1 Drive power supply
9.	Measure voltage at output of the disc drive power supply connector PJ-3, voltage should be + 24 vdc ± 1.2 vdc	J3-3 J3-5	Step 10	Check fuse F1 Drive power supply
10.	Measure voltage at output of the disc drive power supply connector PJ-3, voltage should be - 5 vdc ± .25 vdc	J3-7 J3-6	Daughter PWA Processor PWA Fixed Drive PWA Signal Harness	Check fuse F1 Drive power supply

7.0 Q DISC ERRORS

5.25" AND 8"

1.	If error verify floppy diskette is good and repeat level 1 check out	Error displayed on screen	Step 2	
2.	Clean heads and repeat level 1 checkout	Error displayed on screen	Step 3	

STEP	PROCEDURE	TEST POINT	INDICATION CORRECT	INDICATION INCORRECT
3.	Errors displayed when checking drive A only. Repeat level 1 to checkout the drive after doing each step under the correct column.	Drive A disc error displayed on screen	Check motor speed (5.35") Load pad on single side drives. Replace drive A Daughter PWA (820-II system) Processor PWA Signal Harness	Step 4
4.	Errors displayed when checking Drive B only. Repeat level 1 to checkout the drive after doing each step under the correct column.	Drive B disc displayed on screen	Check motor speed (5.25" only) Load pad on single side drives Replace Drive B Daughter PWA (820-II system) Processor PWA Signal Harness	Step 5
5.	Errors when checking drives A and B. Repeat level 1 checkout after doing each step.	Error displayed on screen	Daughter PWA Processor PWA Signal Harness	
FIXED DRIVE ASEMBLY				
1.	Verify floppy diskette in drive A. Repeat level 1 checkout	errors displayed	Step 2	
2.	Errors indicate problem on drive A.	Errors displayed on screen	Drive A	Step 3
3.	Errors indicate problem on drive B.	Errors displayed on screen	Step 4	Repeat Level 1 checkout
4.	Remove top cover, engage top cover interlock switch and power up the disc drive.	Disc drive motor is rotating and belt is in place.	Step 7	Motor not turning, Go to step 5 Belt off pulley Go to step 6

6.5 Level 2 Check Chart Procedures

STEP	PROCEDURE	TEST POINT	INDICATION CORRECT	INDICATION INCORRECT
5.	Check AC input to motor, voltage should be 115 vac	P/J-4 Pins 1 to 3	Check for Bind. Replace motor	Identify why voltage is not present at motor
6.	Disc drive belt off pulley	Visual	Replace drive belt if worn or broke (3.5.6)	
7.	Check damper for oil leads	leaking oil	Replace damper (3.5.7)	10MB PWA Stepper PWA Fixed controller PWA Disc signal Harness Step 8
	CAUTION **The following procedure can erase all customer files. Verify the customer has backup files on floppy disc so they can re-enter the data erased.**			
8.	Check the integerity of the fixed fixed disc media by running the following backup procedure:			
A.	Insert CP/M disc in left drive		Step B	Repeat Step A
B.	Press reset	820-II VER.XXX 1982 Xerox Corp. L-Load System H-Host Terminal T-Typewriter		Repeat step B
C.	Enter L A on the keyboard	820-II Xerox 60K CP/M VER.XXXXX	Step D	Repeat step A & B
D.	Enter BACKUP on the keyboard and press RETURN	Backup menu will be displayed on screen	Step E	Repeat step D
E.	Enter 4 on the keyboard to verify disc integrity	Screen will display: Vertify which disc	Step F	Repeat step E
F.	Enter E on the keyboard	Program will begin to run with increment block counts displayed on screen, on which bad blocks may appear.	If block count is completed or bad block appears go to step 6.	Step 9

STEP	PROCEDURE	TEST POINT	INDICATION CORRECT	INDICATION INCORRECT
G.	If program shows any bad blocks they should be accepted by (typing A) so program will continue. If no bad blocks appear program will complete. Then press Return	All done Touch any key to exit	Step H	Step 9
H.	Touch return again	Back up menu will be displayed on screen	Step I	Verify CP/M disc
I.	Repeat steps A through H substituting (F) for drive to be verified	Same as A thru H	Step J	Step 9
J.	Repeat steps A through H substituting (G) for drive to be verified	Same as A thru H	Step K	Step 9
K.	Repeat steps A through H substituting (H) for drive to be verified	Same as A thru H	Step L	Step 9
L.	Return system to customer after call management. Inform the customer that the system will no longer allow them to access the bad media. Now go to step			
9.	Format fixed disc media by performing the following procedure:.			
A.	Reset system		Step B	Repeat step A
B.	Insert CP/M disc in drive A		Step C	Repeat step A thru B
C.	Enter L A on keyboard and press RETURN		Step D	Repeat step A thru C
D.	Enter FMT on keyboard and press RETURN	Initializing will erase all the data on the fixed disc touch (any key) to exit or (return) to continue	Step E	Repeat steps A thru D
E.	Press RETURN on the keyboard to continue	Are you sure you want to continue	Step F	Repeat steps A tru E
F.	Press Y on the keyboard to continue	Tracks being initialized will be displayed on the screen and will count up to 1023	Press reset and repeat step 8	10 MB disc drive

SYSTEM WITH 5.25" DISC DRIVE ASSEMBLY

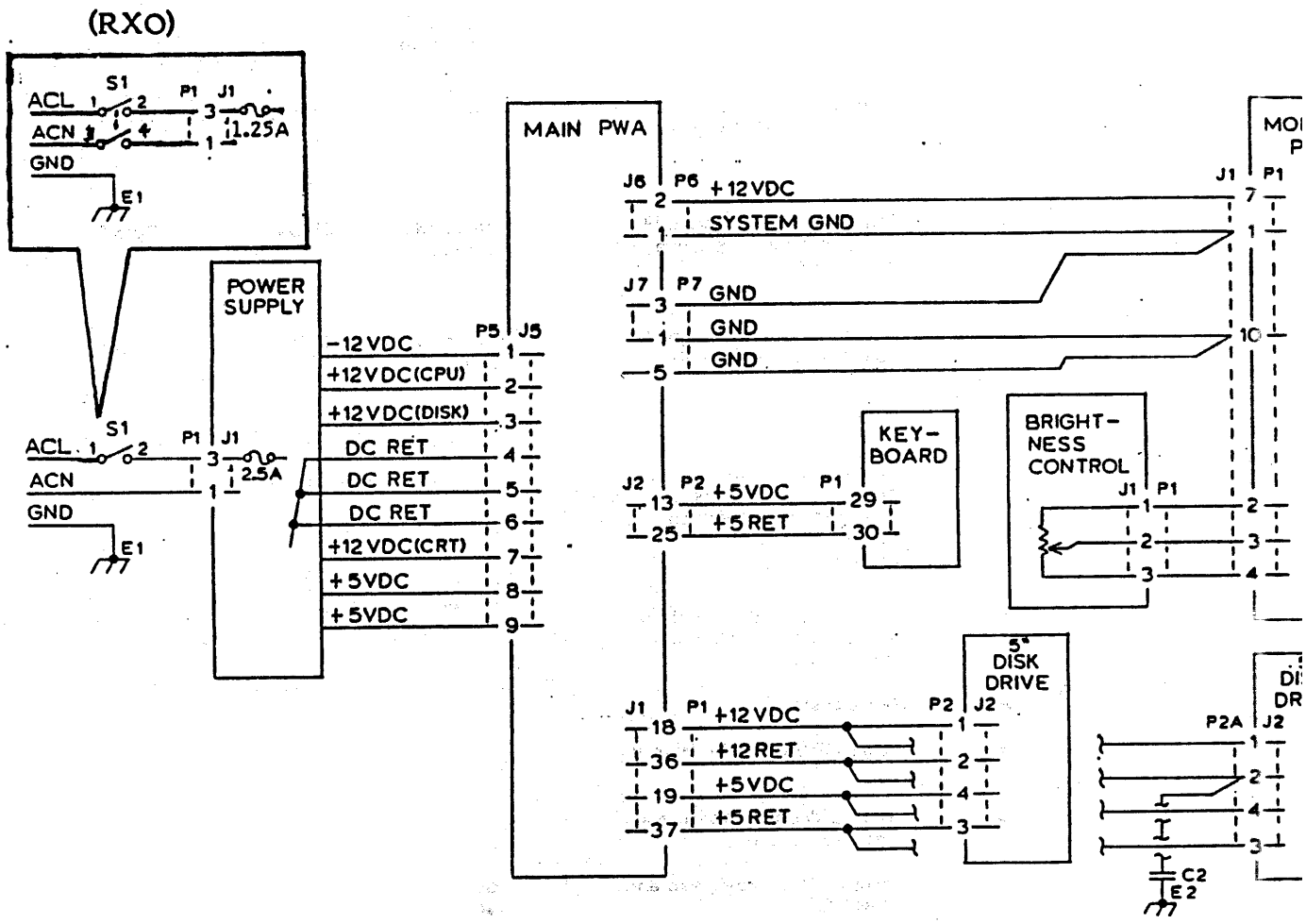

AC/DC DISTRIBUTION

8" DISC DRIVE ASSEMBLY (US)

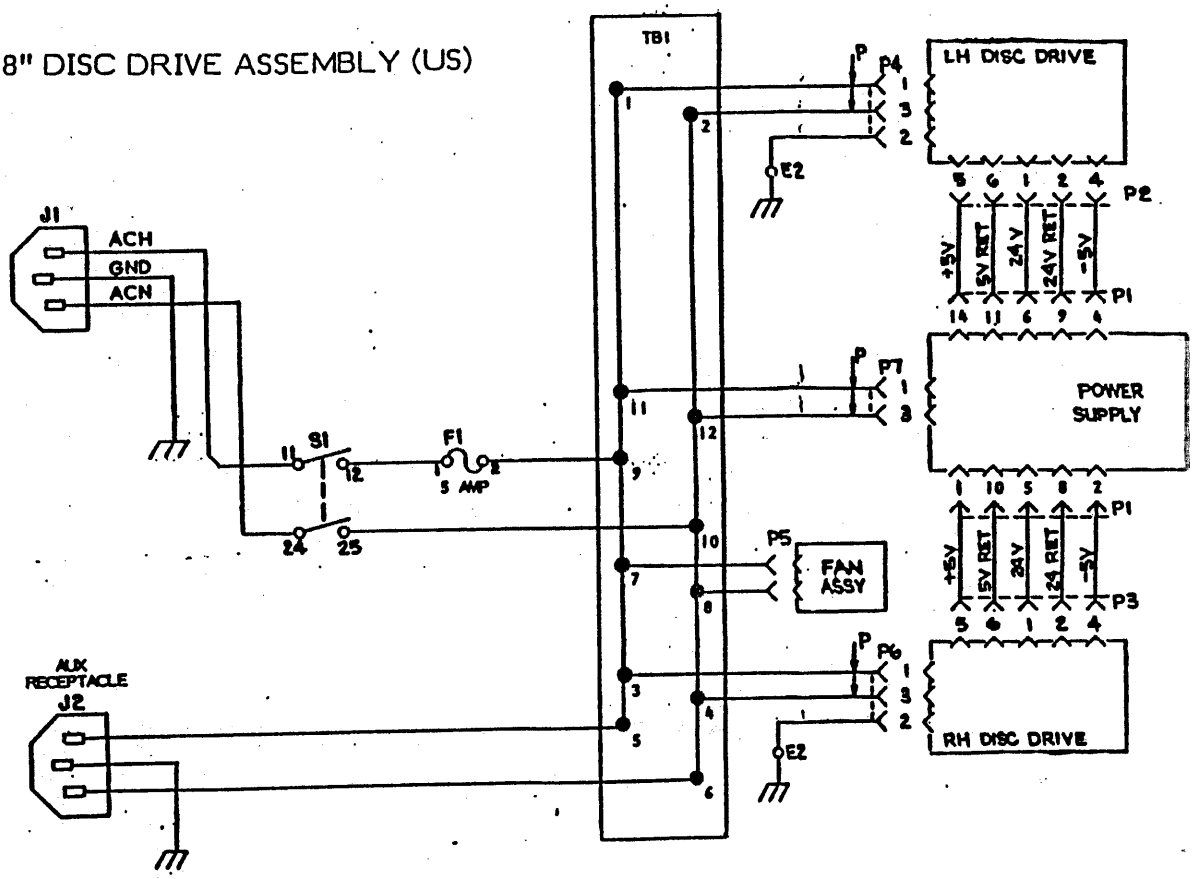

8" DISC DRIVE ASSEMBLY (RX)

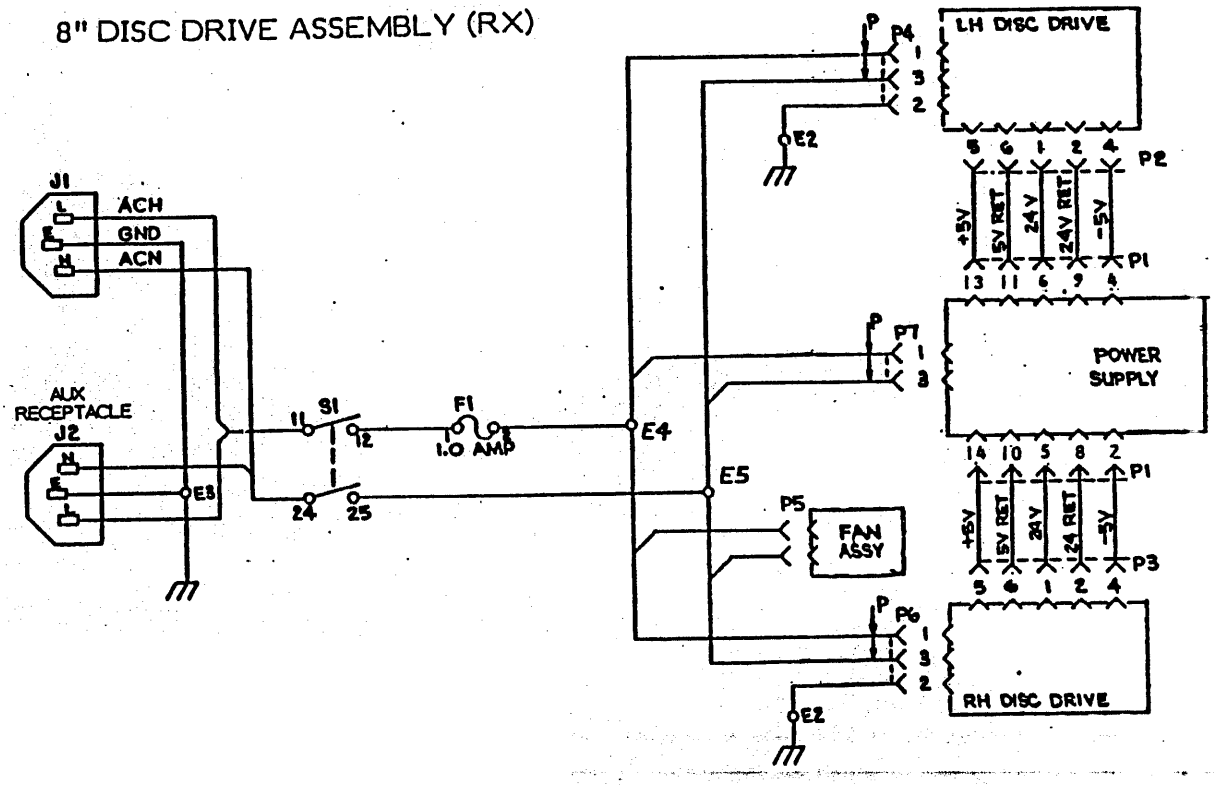

THIS PAGE INTENTIONALLY LEFT BLANK

FIXED DRIVE ASSEMBLY (US)

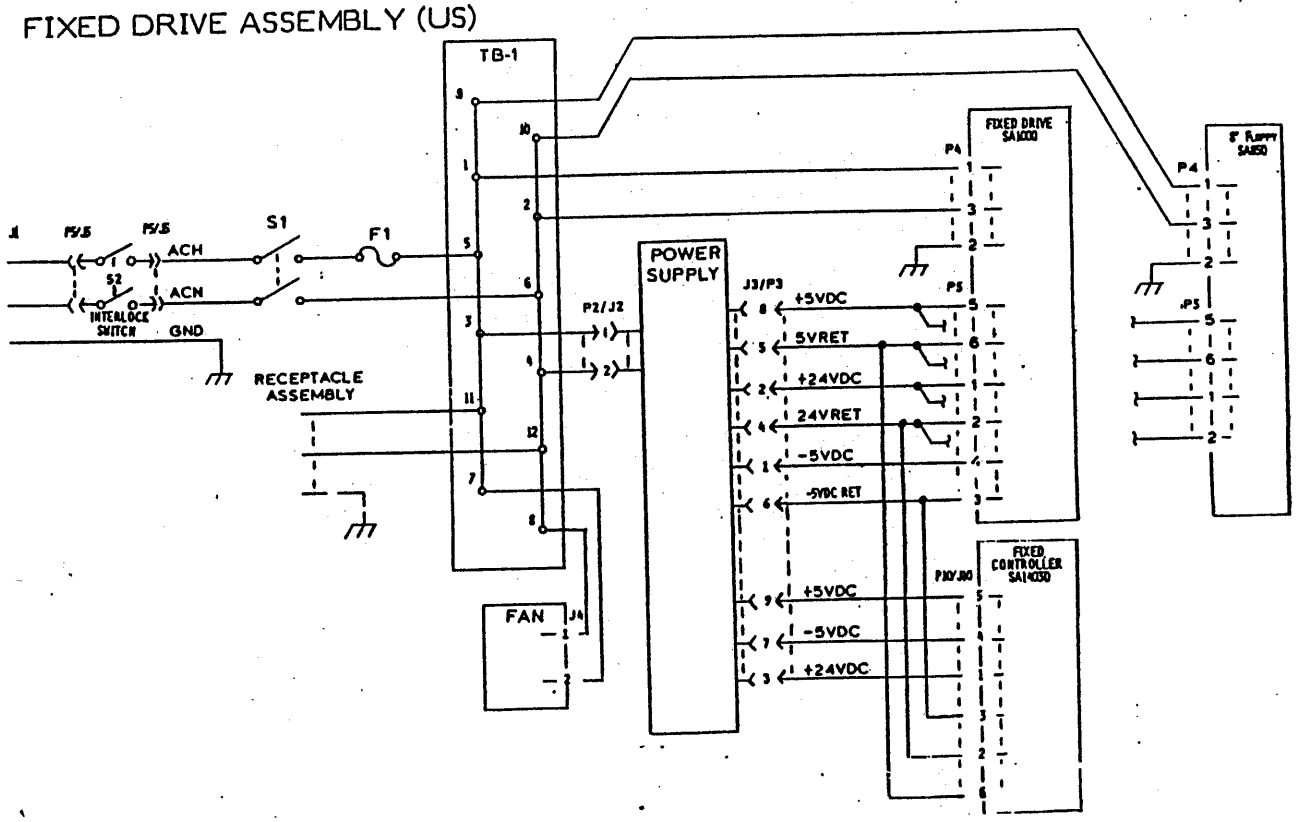

FIXED DRIVE ASSEMBLY (RX)

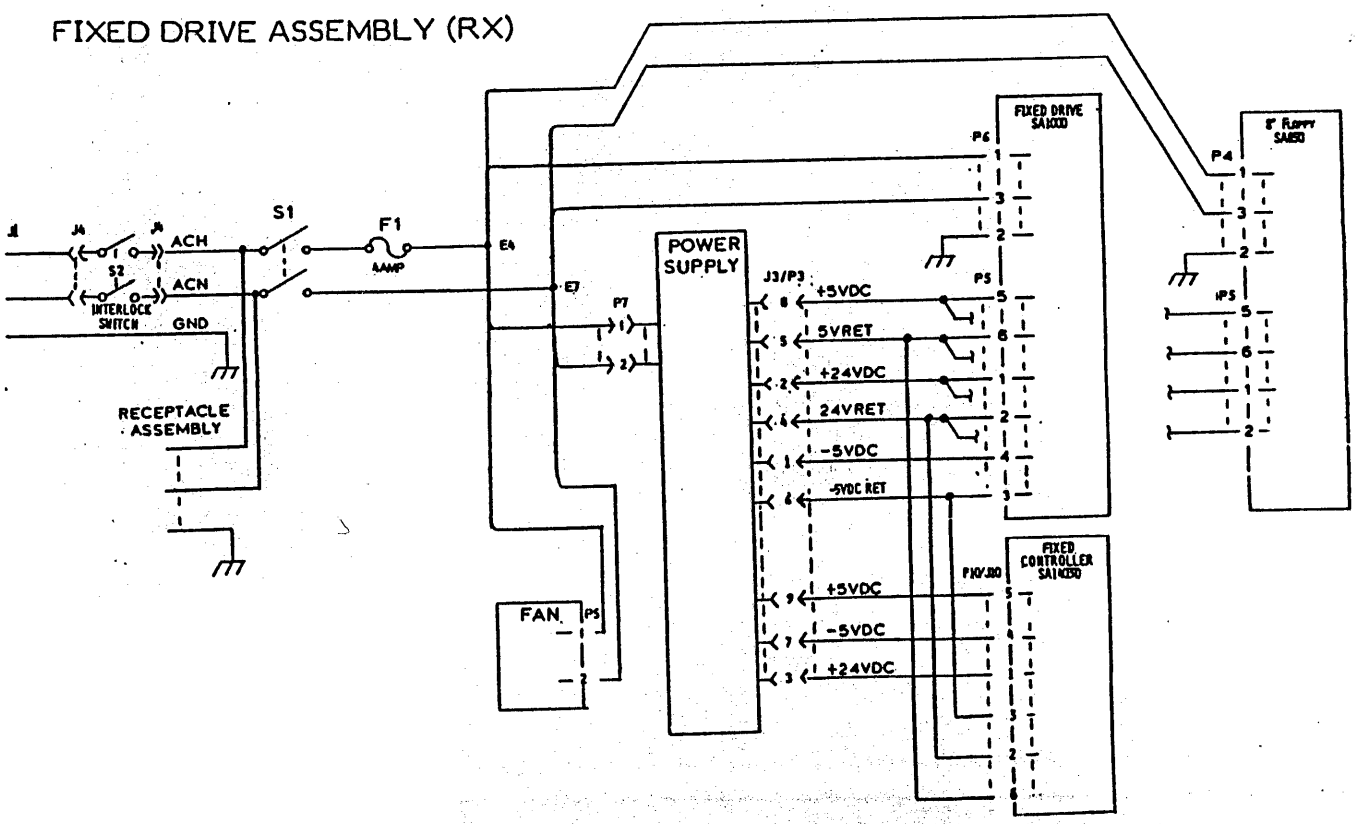

PLUG/JACK LIST

REF	CONNECTOR	FROM	TO
1	P1/J1	Brightness Control PWA	Monitor PWA (P1/J1)
2	P1/J1	Monitor PWA	Brightness Control PWA (P1/J1)
			Processor PWA (P6/J6)
			Processor PWA (P7/J7)
3	P5/J5	Processor PWA	Power Supply (P1/J1)
4	P6/J6	Processor PWA	Monitor PWA (P1/J1)
5	P7/J7	Processor PWA	Monitor PWA (P1/J1)

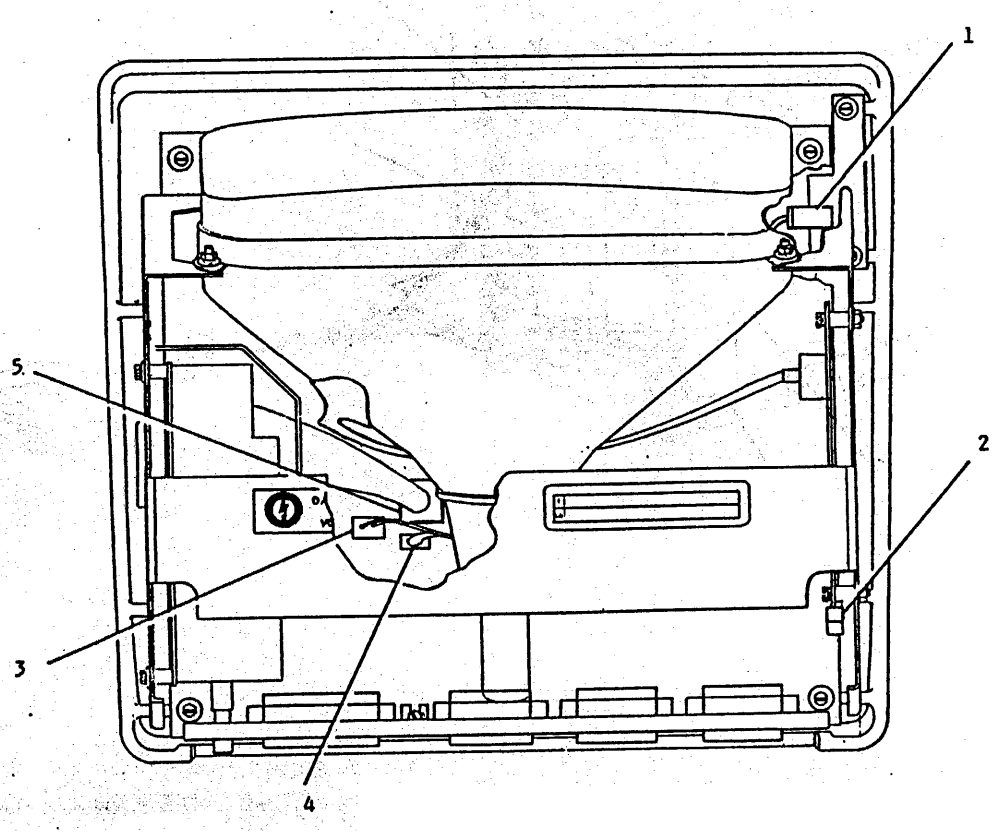

REF	CONNECTOR	FROM	TO
1	P2A/J2A	Right Drive	Processor PWA (P1/J1)
2	P2/J2	Left Drive	Right Drive (P2A/J2A)
3	P1/J1	Left Drive	Right Drive (P1A/J2A)
4	P1A/J1A	Right Drive	Processor PWA (P1/J1)
5	P3/J3	Left Drive	Left Drive PWA
6	P3A/J3A	Right Drive	Right Drive PWA

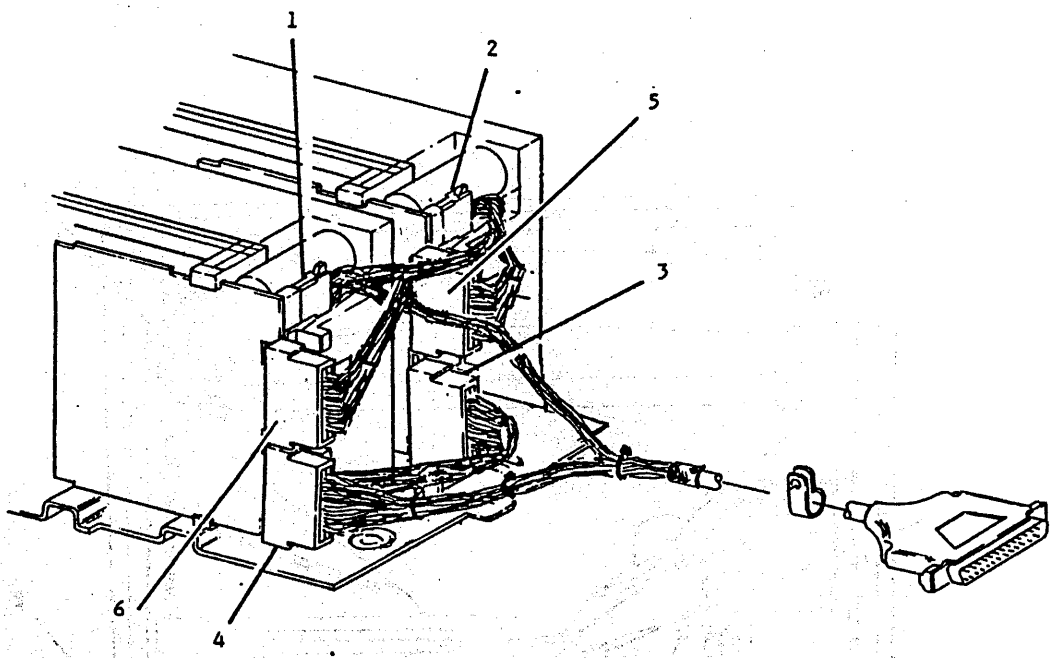

REF	CONNECTOR	FROM	TO
1	P1/J1	Power Supply	AC Power Cord
			Power ON/OFF SW.

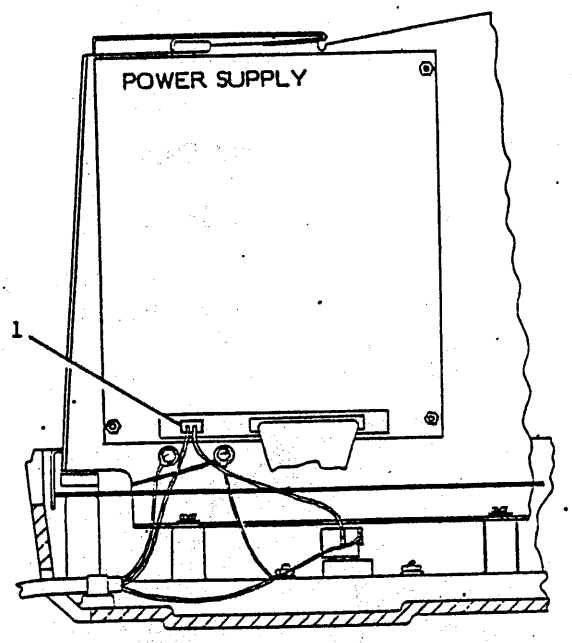

REF	CONNECTOR	FROM	TO
1	P2/J2	Right Drive	Power Supply (P1/J1)
2	P2A/J2A	Left Drive	Power Supply (P1/J1)
3	P1A/J1A	Left Drive	Right Drive (P1/J2)
4	P1/J1	Right Drive	Processor PWA (P1/J1)
5	P4/J4	Right Drive	Terminal Strip
6	P4A/J4A	Left Drive	Terminal Strip

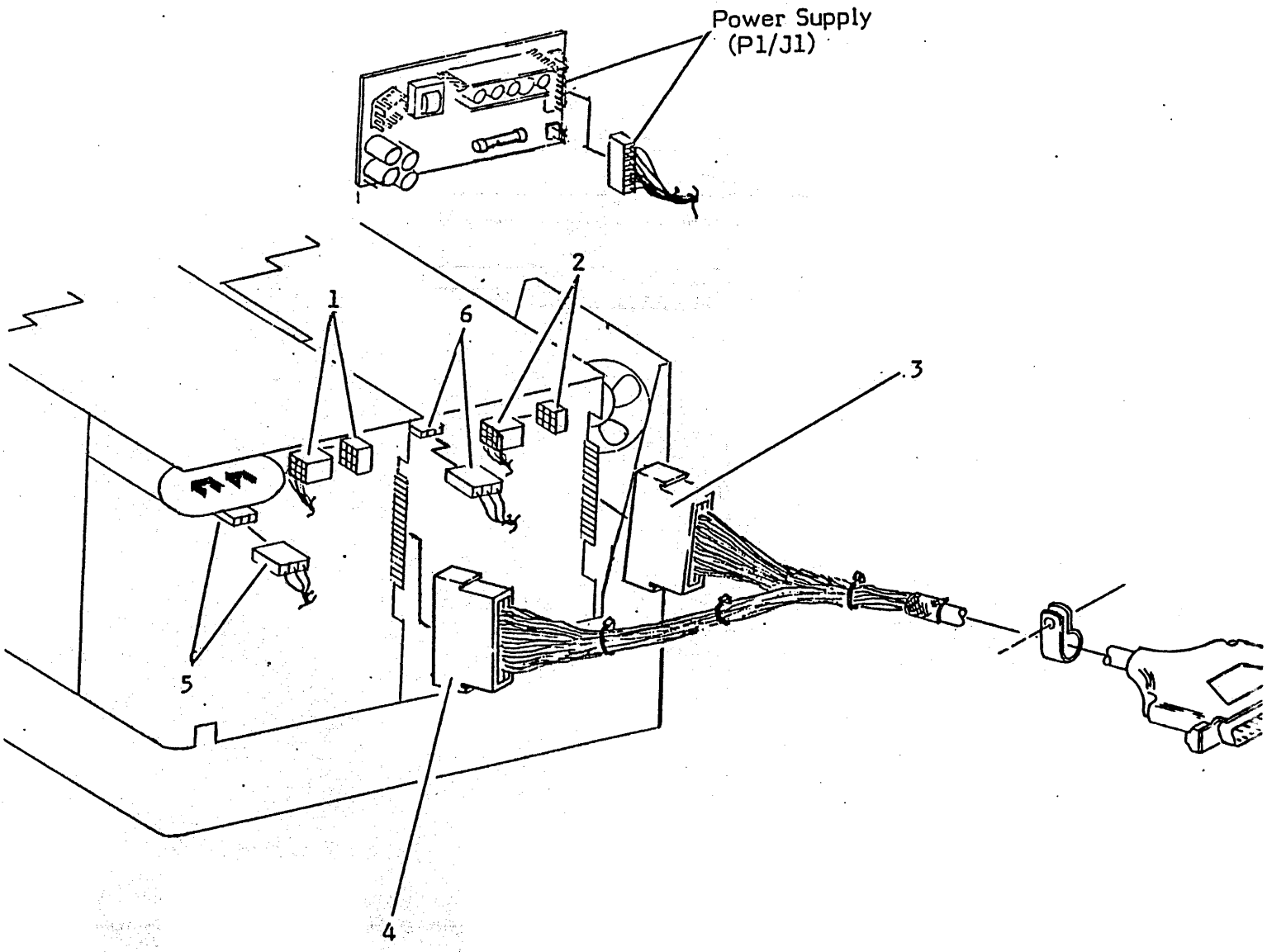

REF	CONNECTOR	FROM	TO
1	Power Supply Terminal Supply	Power Supply	P3/J3
2	P3/J3	Power Supply Harness	Left Drive
3	P6/J6	Left Drive	TB 1
4	A4 P5/J5	Left Drive	Right Drive A2P5/J5 Controller PWA A3 P10/J10 Connector P3/J3
5	A4 P1/J1	Left Drive	Controller PWA A3 P1/J1 Right Drive A2 P1/J1
6	TB 1	Located under Cooling Fan	Distributes AC Power to: Fan Assembly B1 Left Drive A4 P4 Power Supply P2/J2 Right Drive A2 P4/J4 Top Cover Interlock SW P5
7	A3 P1/J1	Controller PWA	Right Drive A4 P1/J1 Left Drive A2 P1/J1
8	P1	Controller PWA	Processor PWA
9	A3 P10/J10	Controller PWA	Power Supply Harness P3/J3 Right Drive A2 P5/J5 Left Drive A4 P5/J5
10	A3 P6/J6	Controller PWA	Signal Harness P1
11	A2 P1/J1	Right Drive	Controller PWA A3 P1/J1 Left Drive A4 P1/J1

REF	CONNECTOR	FROM	TO
12	A2 P5/J5	Right Drive	Power Supply Harness P3/J3 Controller PWA A3 P10/J10 Left Drive A4 P5/J5
13	P5/J5	Interlock Switch	TB 1
14	P4/J4	Right Drive	TB 1 Left Drive P6/J6
15	A1 P1/J1	Stepper PWA	Right Drive A2 P9/J9
16	A2 P3/J3	Right Drive	Fixed Drive Track Selector Motor
17	A2 P7/J7	Right Drive	Right Drive Read/Write Head
18	A2 P8/J8	Right Drive	Right Drive Read/Write Head
19	A2 P9/J9	Right Drive	Stepper PWA A1 P1/J1
20	A2 P2/J2	Right Drive	Controller PWA A3 P2/J2
21	A3 P2/J2	Controller PWA	Right Drive A2 P2/J2
22	J2/P2	Power Supply Terminal Strip	TB 1

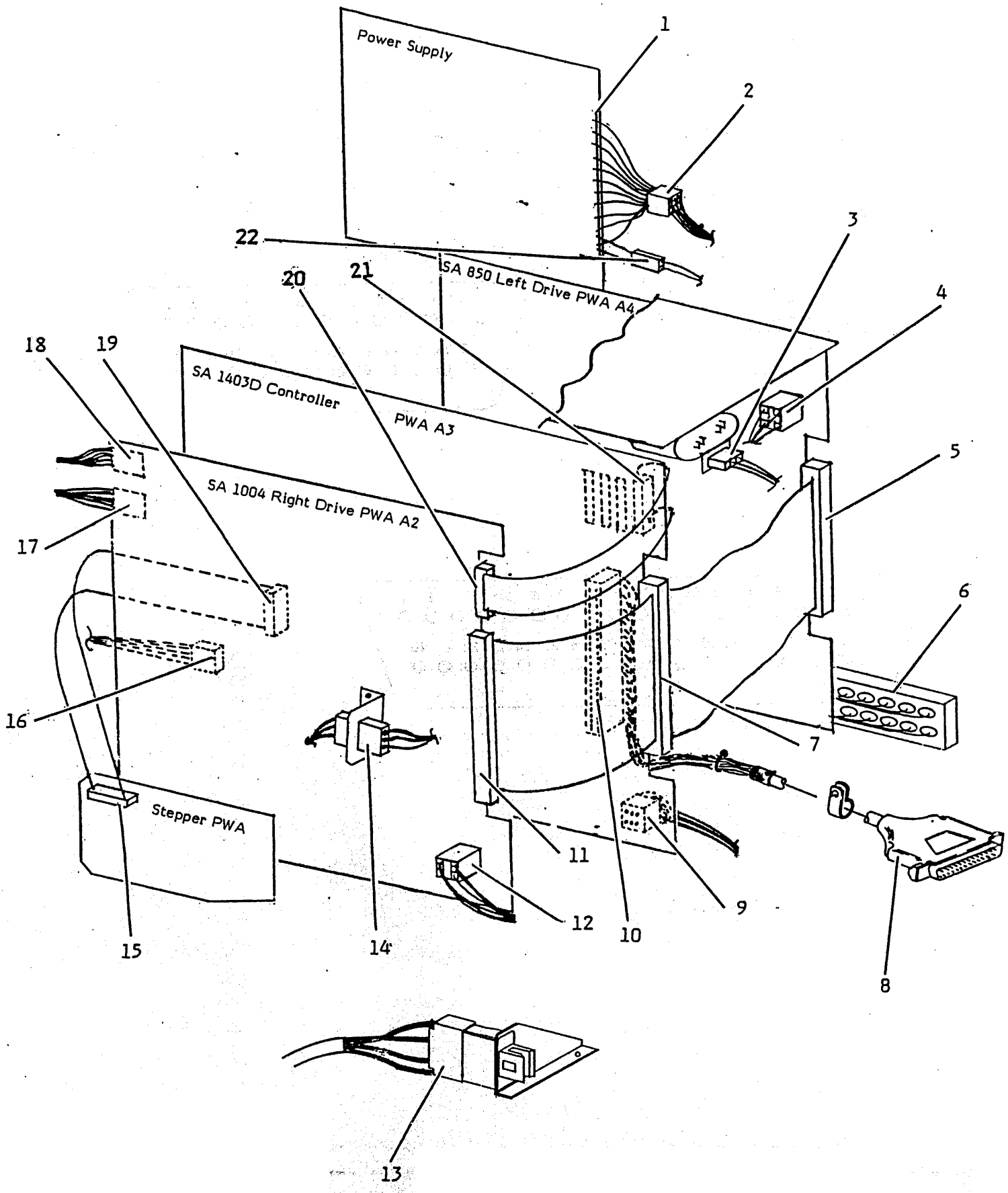
Power Supply
1
2
3
4
5
6
7
8
9
10
11
12
13
14
15
16
17
18
19
20
21
22
SA 850 Left Drive PWA A4
SA 1403D Controller
PWA A3
SA 1004 Right Drive PWA A2
Stepper PWA


1 2

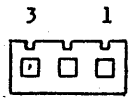
3 1

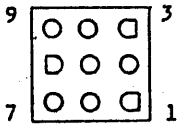
9
3
7
1

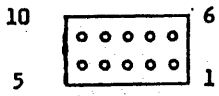
10
6
5
1

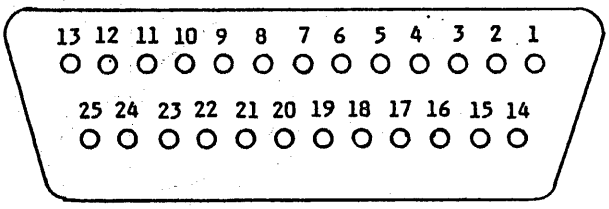
13 12 11 10 9 8 7 6 5 4 3 2 1
25 24 23 22 21 20 19 18 17 16 15 14

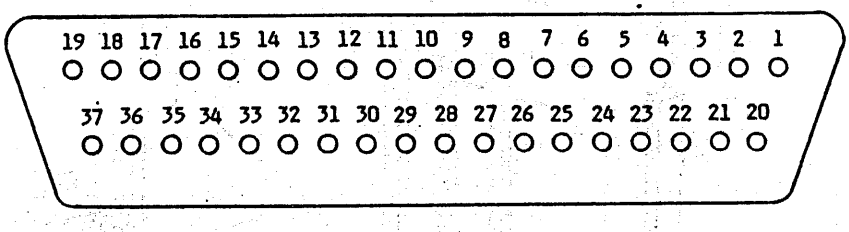
19 18 17 16 15 14 13 12 11 10 9 8 7 6 5 4 3 2 1
37 36 35 34 33 32 31 30 29 28 27 26 25 24 23 22 21 20

SYSTEM WITH 5.25" DISC DRIVE ASSEMBLY

(RXO)

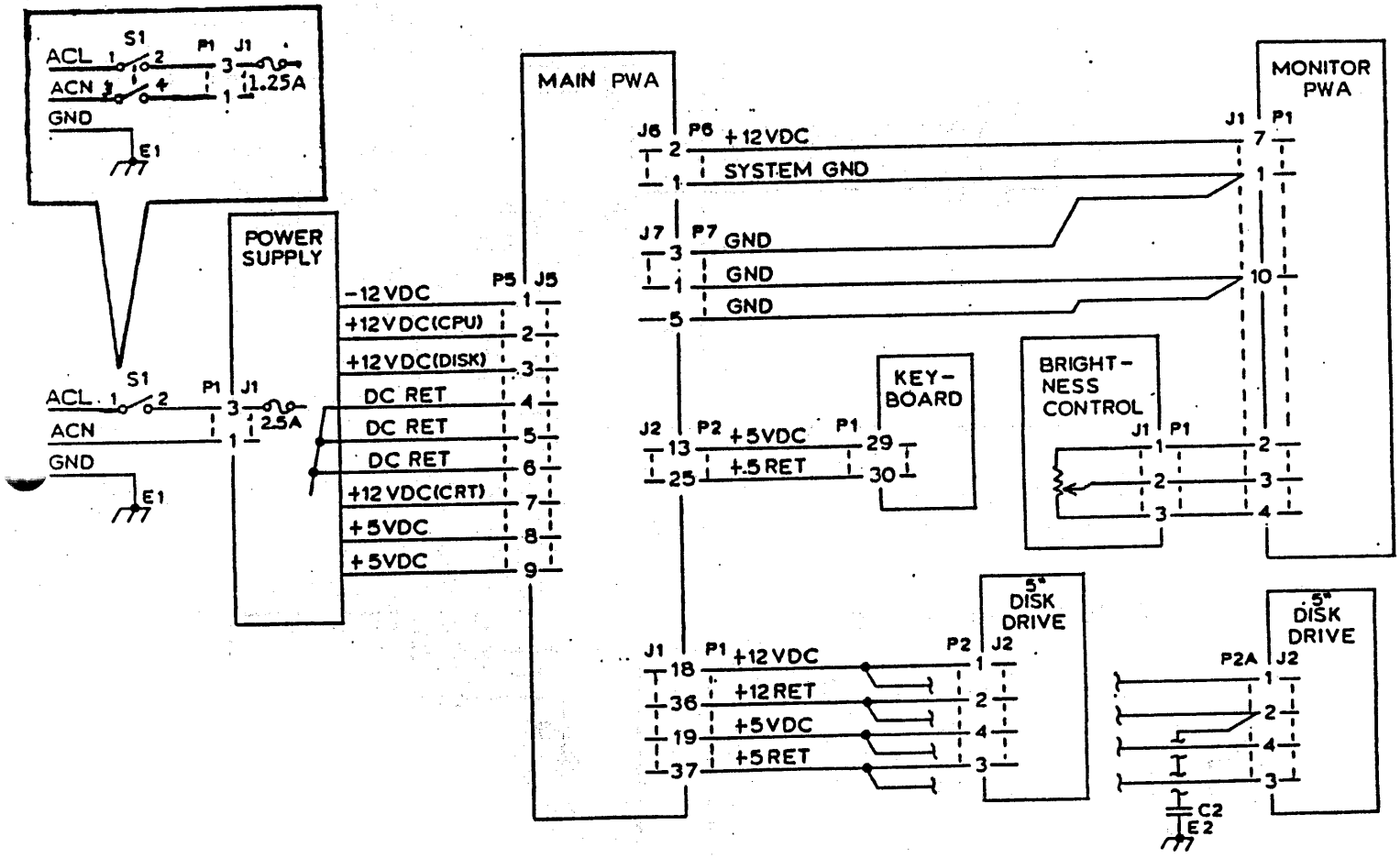

8" DISC DRIVE ASSEMBLY (US)

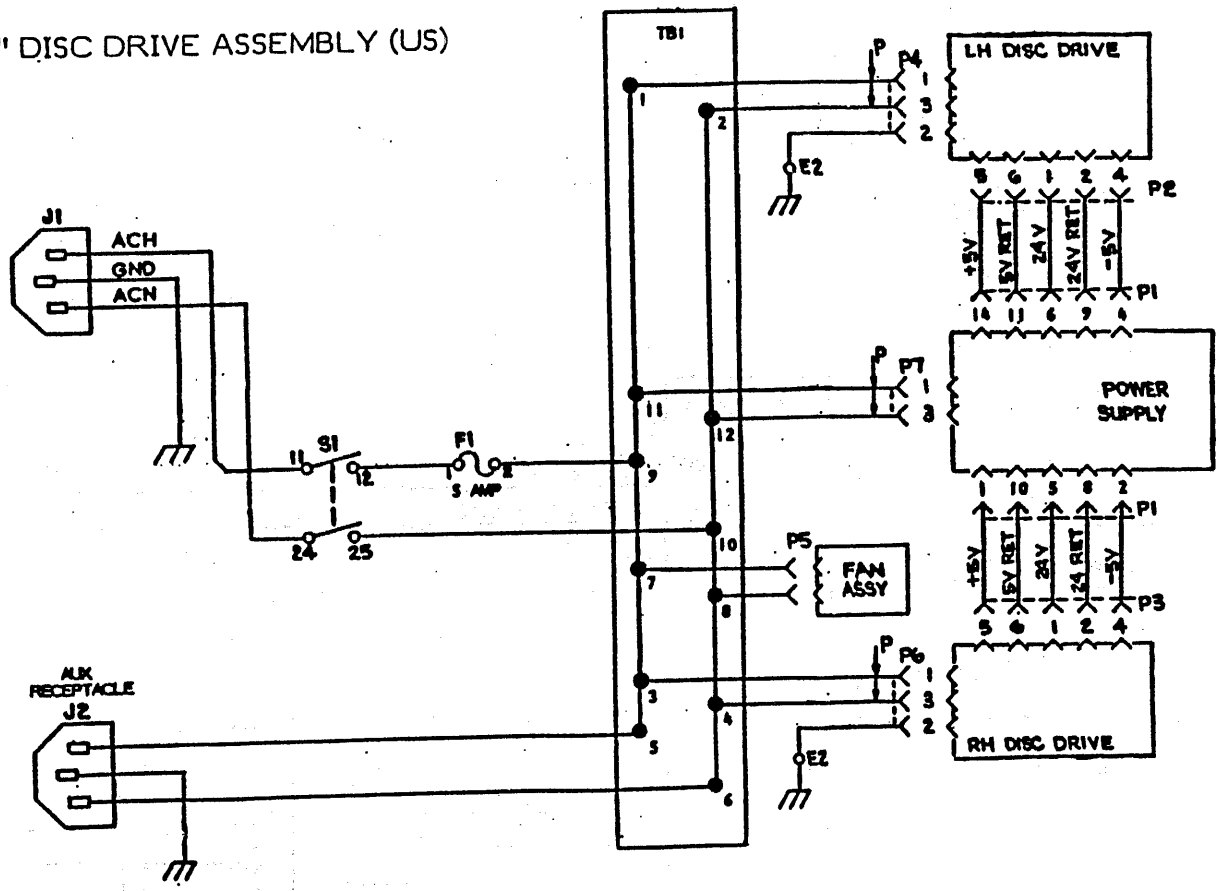

8" DISC DRIVE ASSEMBLY (RX)

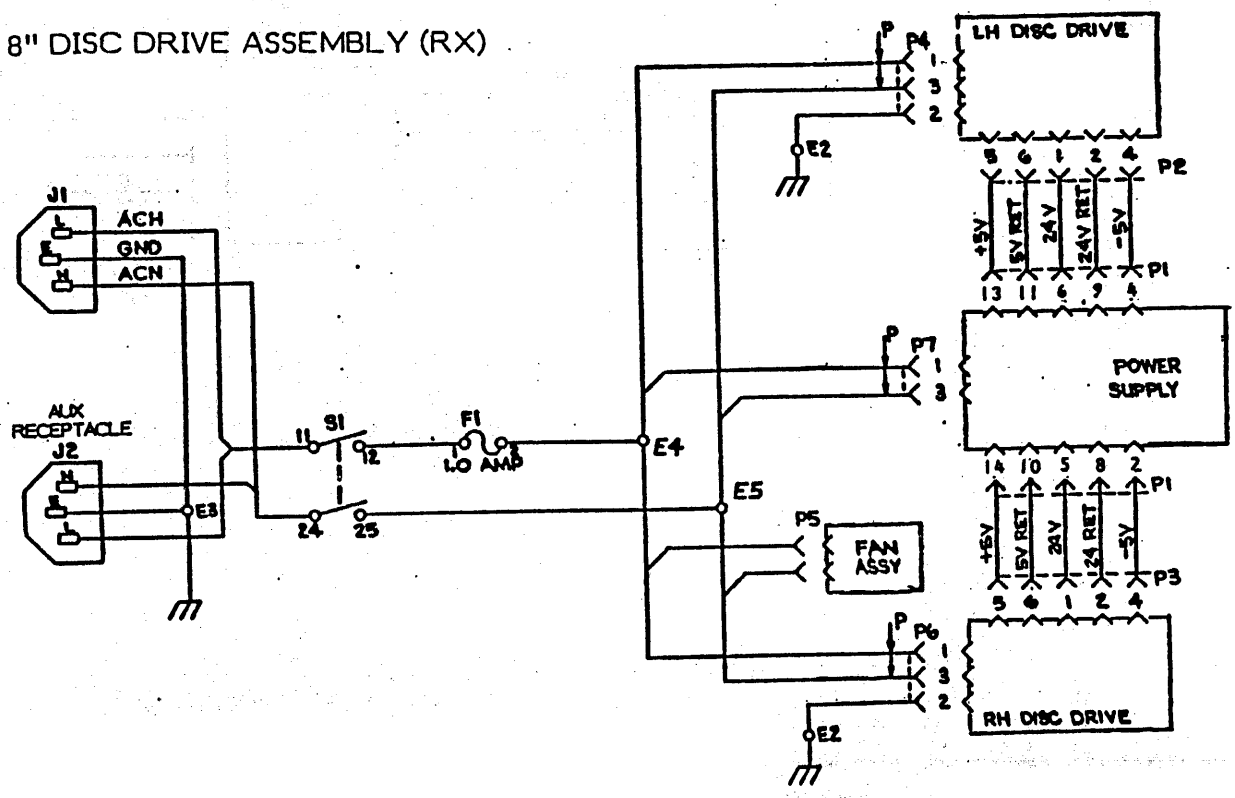

FIXED DRIVE ASSEMBLY (US)

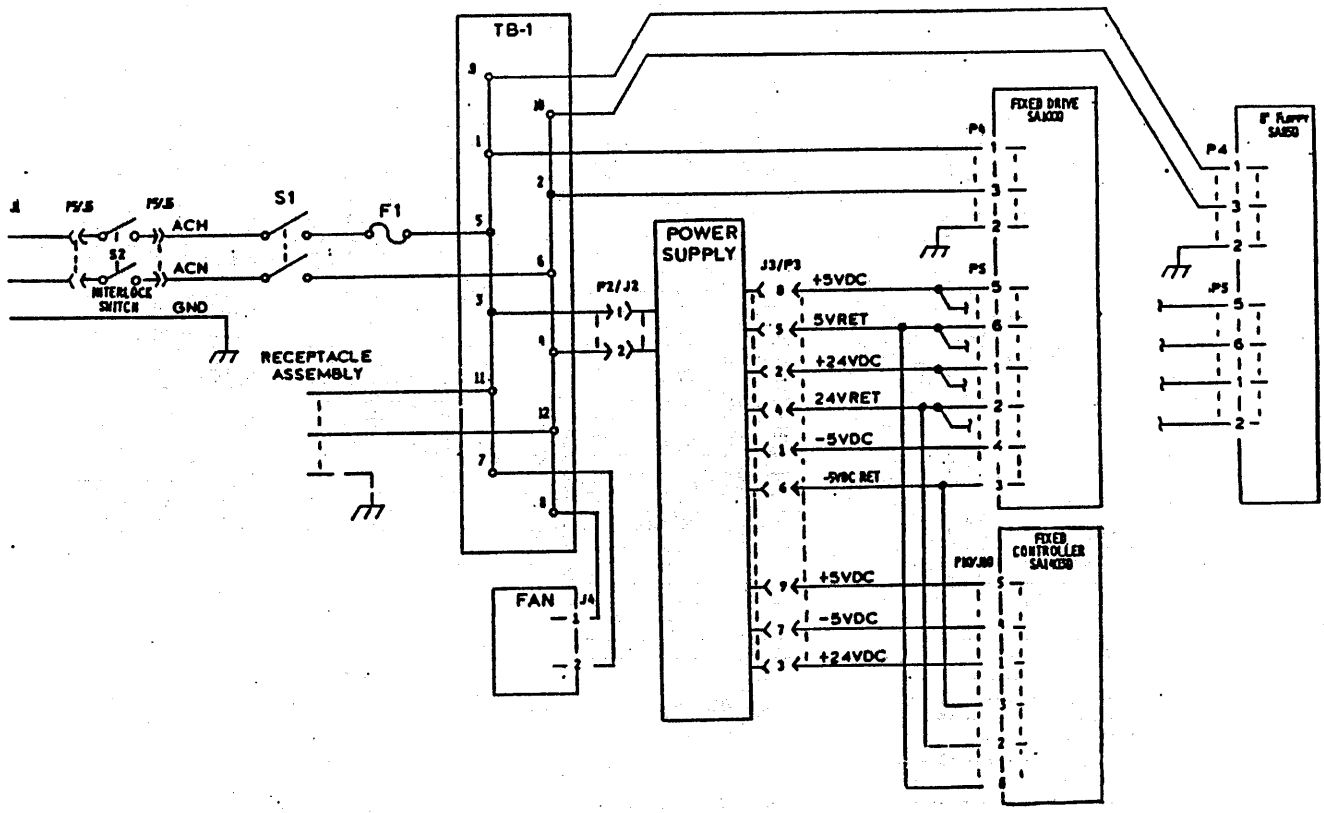

FIXED DRIVE ASSEMBLY (RX)

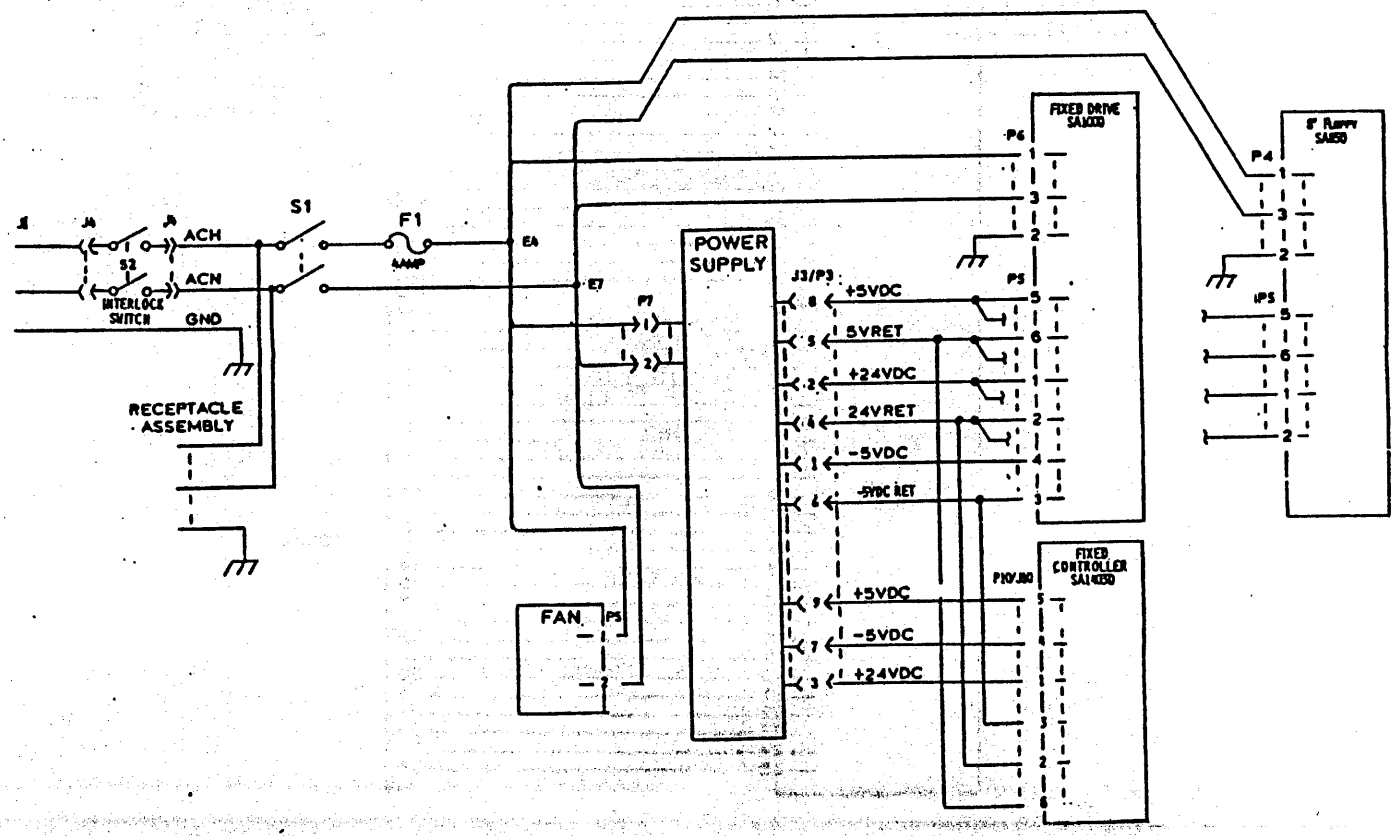

FIXED DRIVE SYSTEM

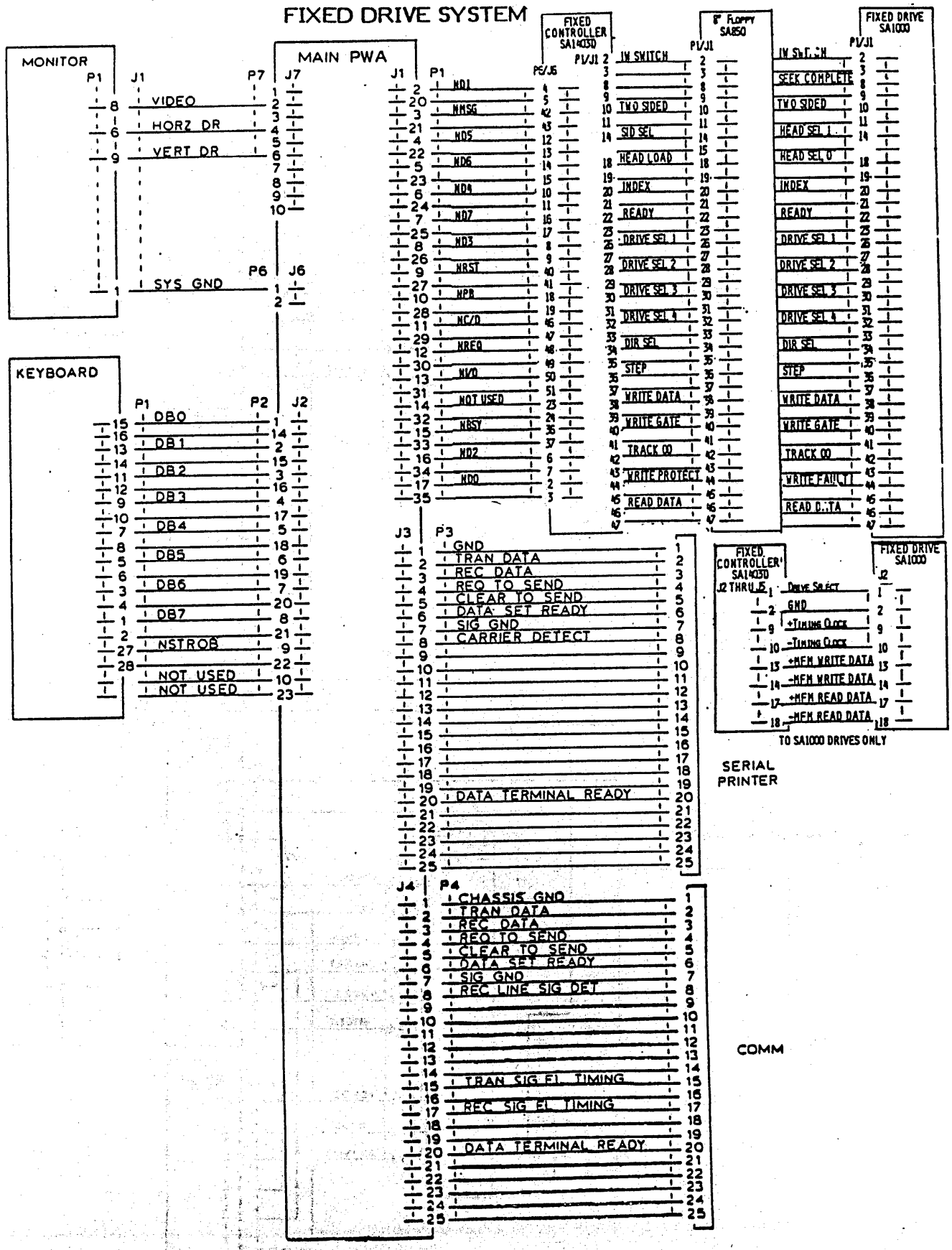

5.25" and 8" FLOPPY DRIVE SYSTEM

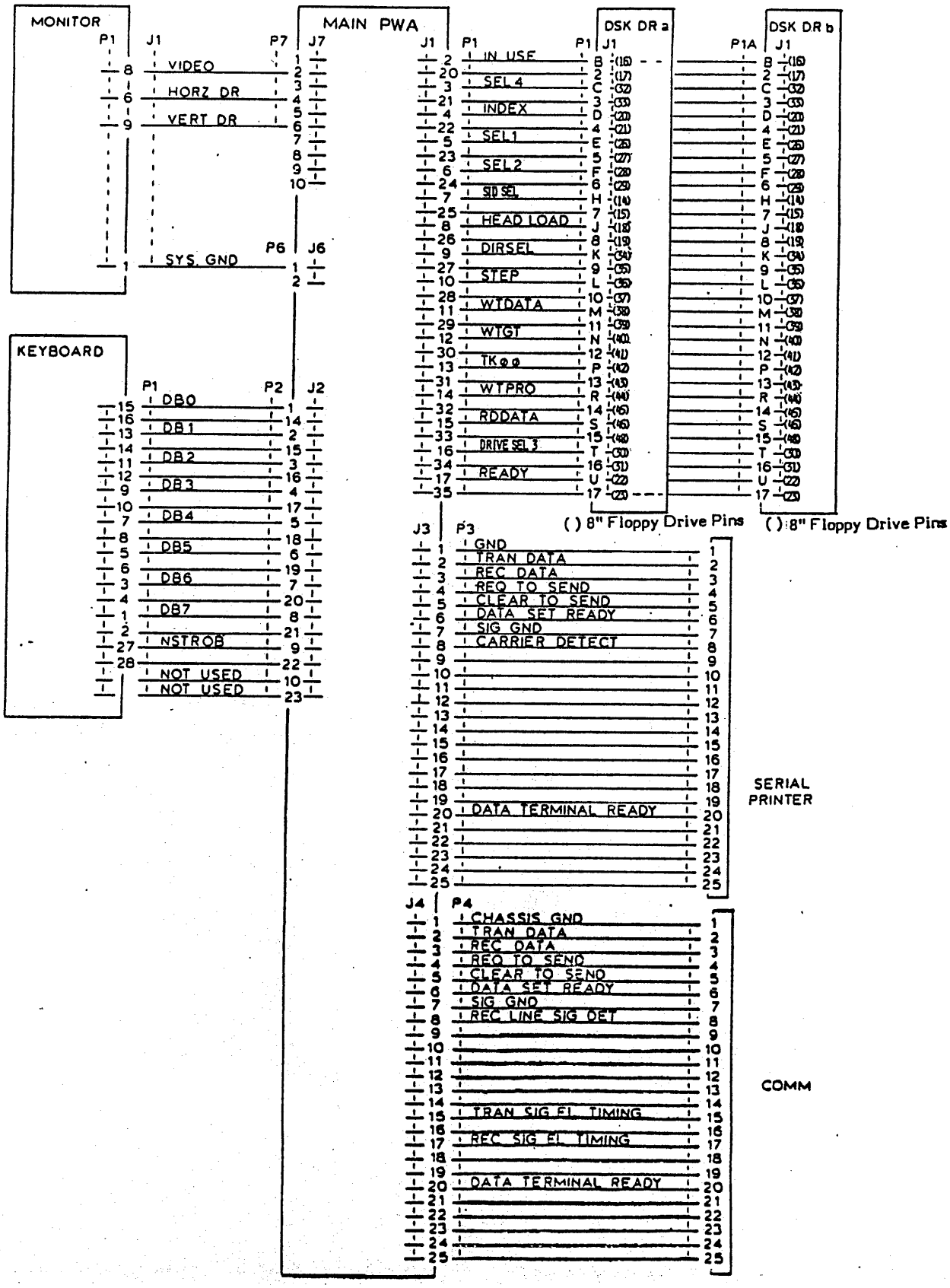

THEORY OF OPERATION

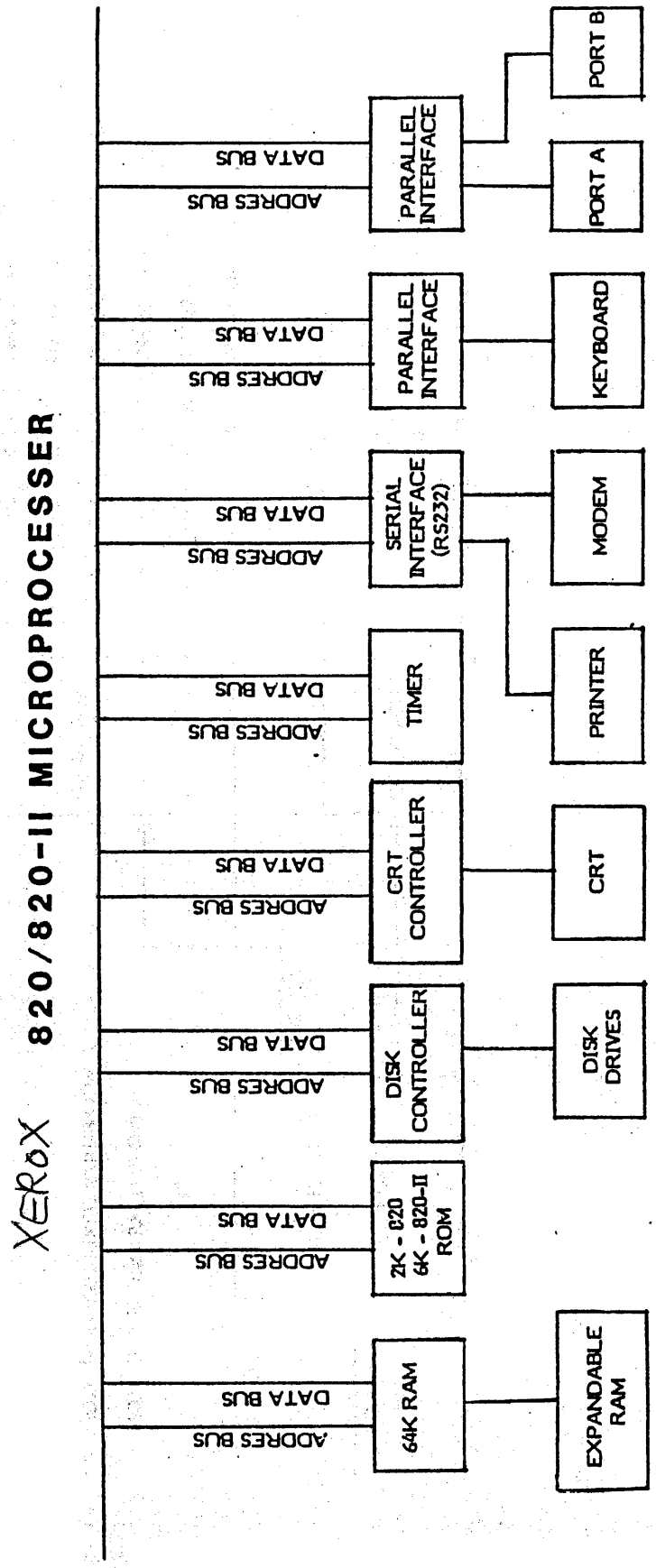
XEROX 820/820-II MICROPROCESSER
ADDRES BUS
DATA BUS
64K RAM
EXPANDABLE RAM
2K - 820
6K - 820-II
ROM
DISK CONTROLLER
DISK DRIVES
CRT CONTROLLER
CRT
TIMER
PRINTER
SERIAL INTERFACE (RS232)
MODEM
PARALLEL INTERFACE
KEYBOARD
PARALLEL INTERFACE
PORT A
PORT B

FIG. 8-1

Power Block Diagram

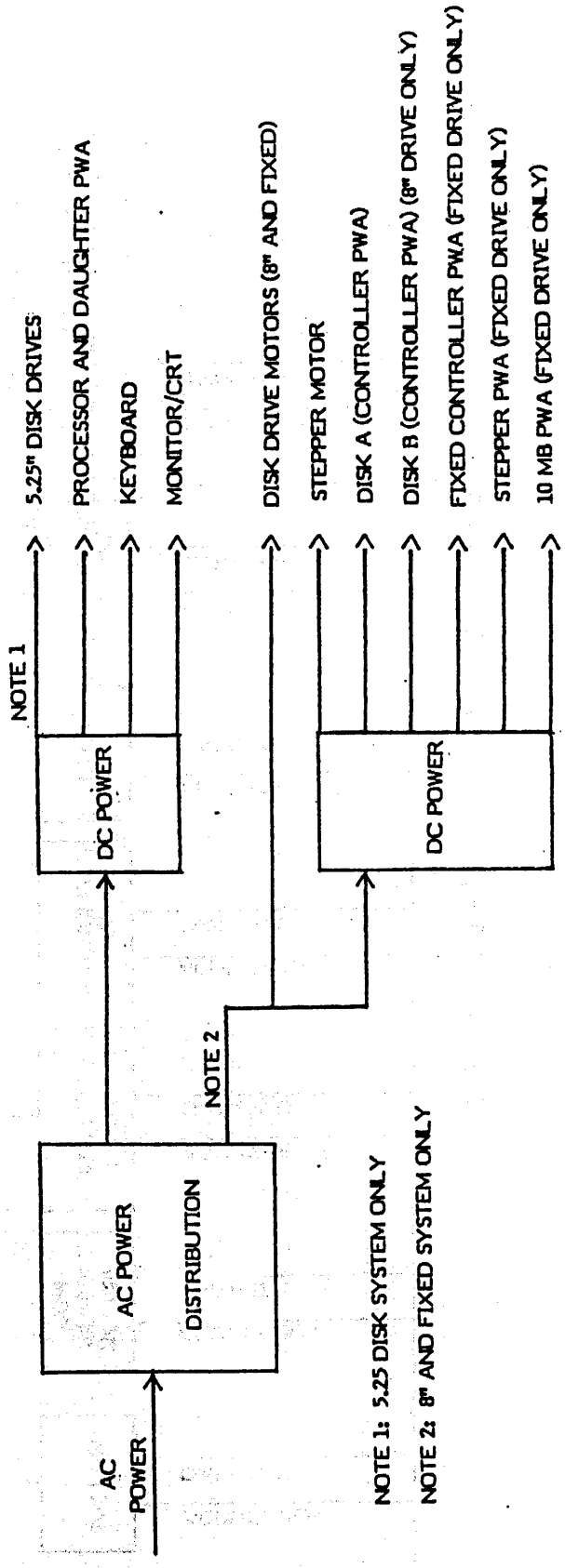

FIG. 8-2

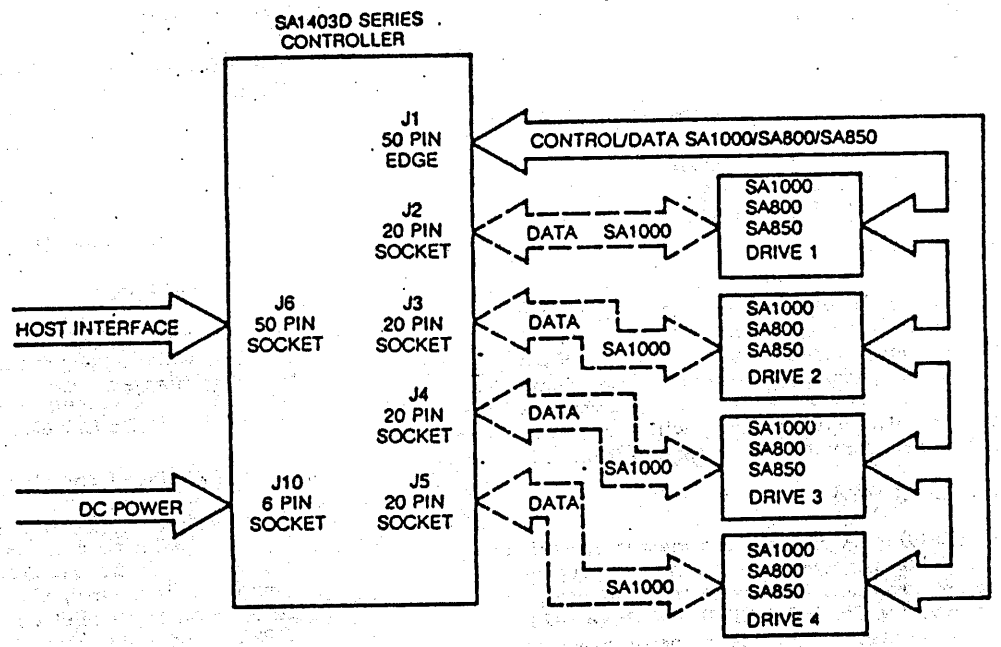

Figure 8-3 SA1403D INTERCONNECT DIAGRAM

8.1 General

The 820 family is a table top microcomputer composed of the following assemblies:

820 IP Processor

1. D.C. Power Supply
2. Processor (CPU) PWA.
3. CRT Assembly
4. Keyboard Assembly

820 IP – SA400 (5.25" Single Sided Floppy Drive)
820 IP – SA800 (8" Single Sided Floppy Drive)
820 IP – SA450 (5.25" Dual Sided Floppy Drive)
820 IP – SA850 (8" Dual Sided Floppy Drive)

820-II Processor

1. D.C. Power Supply
2. Processor (CPU) PWA
3. Floppy Disk Daughter PWA or, Fixed Disk Daughter PWA
4. CRT Assembly
5. Keyboard Assembly

820-II IP – SA400 (5.25" S.S. Dual Density Floppy Drive)
820-II IP – SA800 (8" S.S. Dual Density Floppy Drive)
820-II IP – SA450 (5.25" D.S. Dual Density Drive)
820-II IP – SA850 (8" D.S. Dual Density Floppy Drive)
820-II IP – SA1000 (10 MB Fixed Drive)

8.2 D. C. Power Supply

The D. C. Power Supply converts the AC supply input to three DC voltages required by the system. These voltages are +5, +12 and - 12VDC. Each voltage has short circuit protection by electronic current limiting. When any of the outputs are overloaded the entire Power Supply will shut down. The +5VDC is provided with overvoltage protection.

8.3 Processor (CPU) PWA

The processor (CPU) PWA provides the master control for the system. The Microprocessor is the central processing unit. It executes programs (software) that are stored in the 64K Ram and the 2K ROM (820), 6K ROM (820-II). The 820 IP incorporates a Z80 Microprocessor where as the 820-II IP incorporates a Z80A. Added features of the 820-II IP processor are:

A. 4 MHz Clock
B. 2-RS232 Ports (one dedicated to serial printer)
C. 820 System Bus Access
D. Audible Alarm
E. Video Highlighting
F. 6K ROM Expansion Capacity
G. 2-Fixed Disc Drive Options:
SA606 and SA450
SA1004 and SA850
H. Ethernet Connection (via 872/873 Comm Server)
I. 2-Buffered 8 Bit Parallel ports
J. Display Graphics

The CPU is supported by five intelligent periphial controllers. These devices handle the tasks of transferring the data to and from the periphial devices, thus relieving the burden on the CPU.

A. Disc Controller

This device (On the 820-II, it is located on the Daughter PWA for the floppy or the fixed) interprets commands from the CPU and generates appropriate control signals for the disc drives. It also interprets status signals from the disc drives and delivers them to the CPU upon request. The second function is to convert parallel data from the Data Buss to serial data suitable for recording on the disc and also the conversion from the serial data read from the disc to parallel data suitable to the CPU. The fixed drive assembly contains a 1403D Controller PWA that in effect tells the system what type of drives are being used (SA800, SA850, or SA1004).

B. CRT Controller

The devices that make up the CRT Controller provide interface for the display and CPU. The CRT Controller will convert data from the system data bus into Horizontal Sync, Vertical Sync and Video signals used by the display. The CRT Controller also handles the task of scrolling characters up the screen.

C. Timer Controller

The timer controller's function is to signal the CPU when a pre-programmed amount of time has elapsed. One of the uses of this timer is the 30 second delay before turning off the 5.25" Disc Drives.

D. Serial Interface Controller

This device handles the conversion of the CPU's parallel data to serial data required for serial printers and data communications equipment (modems), also the conversion of serial data to parallel data suitable for the CPU. The controller also provides status information from the external serial device to the CPU. Modem control commands from the CPU are generated by this controller.

E. Parallel Interface Controller

This device is used as an interface between the CPU and the parallel keyboard. It also generates some control signals used as Disc Drive selects and memory bank selecting.

8.4 DISC DRIVES (5.25")

The left and right disc drives are identical except for the placement of jumpers/resistor networks on the disc drive PWA's. Each of the Floppy Disc Drives contains the following.

1. DC Drive Motor
2. DC Head Stepper Motor
3. Read/Write Head
4. Head Load Solenoid And Load Pad.
5. Track - Detector Switch

6. Index Led/Detector
7. Write Protect Switch
8. Control PCB
9. Drive Indicator LED

DC Power is constantly supplied through the disc interface harness from the power supply in the processor. The DC drive motor is turned on when the appropriate control signal is active from the processor PWA. The disc drives receive control signals through the disc signal harness from the Floppy Disc Controller on the processor (CPU) PWA. These control signals select the appropriate disc drive, control the head stepper motor, the head load solenoid and select read or write modes.
The disc drives send the following status information through the disc signal harness to the Floppy Disc Controller on the Processor (CPU) PWA:

1. Ready (Floppy disc loaded and at speed)
2. Index (Index hole sensed)
3. Track 00 (Read/Write Head positioned on Track 0)
4. Write protect (Write protected disc loaded in the drive)

The function of the Disc Drives is to magnetically record (write) data on a floppy disc, and to play back (read) information that had previously been stored on a floppy disc.

8.5 DISC DRIVES (8")

The left and right Disc Drives are identical except for the placement of jumpers on the disc drive PWA.

Each of the Floppy Disc Drives contains the following:

1. AC Drive Motor
2. DC Head Stepper Motor
3. Read/Write Head
4. Head Load Solenoid and Load Pad
5. Track 00 LED/Detector
6. Index LED/Detector
7. Write Protect LED/Detector
8. Control PWA
9. Drive Indicator LED

AC power is constantly supplied through the Disc AC power cord to the drive motors from the AC Power Distribution Panel when the power on switch is on. The disc rotational speed is 360 rpm. The drive pulleys and belts are different sizes for the USO/XC systems (60Hz) and the RX systems (50 Hz) in order to obtain the 360 rpm speed.

The Internal Supply supplies DC power (+5 VDC, -5 VDC, +24 VDC and GND) through the Disc DC Harness . The DC power is used for the logic circuits and driver/receiver circuits on the PWA's. The Disc Drives receive control signals through the Disc Signal Harness from the Floppy Disc Controller on the Processor CPU PWA. These control signals select the appropriate Disc Drive, control the Head Stepper Motor, the Head Load Solenoid, and select Read or Write modes.

The Disc Drives send the following status information through the Disc Signal Harness to the Floppy Disc Controller.

1. Ready (Floppy Disc loaded and at speed)
2. Index (Index hole sensed)
3. Track 00 (Read/Write Head positioned on Track 0)
4. Write Protect (Write protected disc loaded in the drive)

The function of the Disc Drives is to magnetically record (write) data on a floppy disc, and to play back (read) information that had previously been stored on a floppy disc.

8.6 5.25" AND 8" DUAL SIDED

The SA450 and SA850 Disc Drives are also used on the 820 Family. The functions are the same as the SA400 and the SA800 with the exception of a additional signal "side select" thus allowing the Dual sided 5.25" drives to have 80 tracks and the dual sided 8" drives to have 154 tracks. On the 820-II Processor, we have double density capability. This is obtained by the use of MFM (modified frequency modulation) and M2FM (modified, modified frequency modulation) rather than FM, which is the standard method of encoding data on the diskette. This causes the write oscillator frequency to double. Data transfer rate is also doubled. Thus we now have dual sided, double density which is approximately four times the capacity of a single sided, single density.

8.7 CRT ASSEMBLY

The CRT Assembly contains a complete CRT monitor requiring only DC Power, horizontal and vertical Sync and video inputs.

The CRT has a 12 inch screen with a display capability of 24 lines of 80 characters per line. The Video rate is 15MHz.

The 820-II has Business Graphics made possible by a 4*4 Pixel Resolution. It has two sets Of 128 character sets (1 U.S. FONT, 1 GRAPHIC FONT), plus the capabilities for 2 additional sets. The 820-II also has Character Blinking and Highlighting. The RX units have a INTERNATIONAL FONT.

8.8 KEYBOARD ASSEMBLY

The Keyboard provides the keyswitches that upon activation generate the appropriate ASCII code to the parallel interface controller on the CPU PWA.

8.9 1403D DISC DRIVE CONTROLLER

The SA1403D Controller (located in the Fixed drive box assembly) consists of a microprocessor based controller with on-board data separator logic and is able to control a maximum of four drives. The drives can be any combination of Shugart SA1000 fixed drives, SA800 or SA850 floppy disk drives.
Data is transferred to and from the controller over a 7 bit with parity bidirectional bus connected to the Processor. The data separator logic serializes bytes and converts to FM/MFM data, to send to the selected Disc Drive and deserializes FM/MFM data into 8-bit bytes to send to the Processor. The cammand and status information is passed between

the processor and 1403D controller on Unidirectional Signals Busy, Acknowledge, Reset, Message, Select, Control Data, Request, and Input/Output.
Shugart SA800/SA850 disc drives are interfaced via J1. Shugart SA1000 disc drives are interfaced via J1, J2, J3, J4, and J5 with the processor is interfaced via J6. The Processor is interfaced via J6. Refer to Figure 8-3 in the Theory Of Operations in your service manual for connection block diagram.

8.10 FIXED DISC ASSEMBLY

The Fixed DISC Assembly contains two discs, a power supply and the fixed controller PWA.

The Fixed Controller PWA is the SA 1403D described in the discicontroller section.

The Internal Power Supply, similar to the 8" disk power supply, supplying DC power (+5 VDC, -5 VDC, +24 VDC and GND) to both disks through the DC harness. The DC power is used for logic circuits, driver/receiver circuits, head write current, and the DC stepper motor control, on both disc drives.

The left disc is a SA 850 (Dual Sided Double Density) floppy drive. This is the same floppy drive as used in the 8" (Dual Sided) disk assembly, consisting of the same sub-assemblies. The floppy drive has the same interface as in the 8" assembly except it communicates with the Fixed Controller and the Fixed Controller then interfaces with the 820 Processor.

The right disc is a SA 1004 disk drive. This is a Shugart, 2 platter, 4 head 10 mega byte fixed disc drive. This disk drive contains the following:

1. The sealed 2 platter 4 head with stepper motor and idex transducer assembly
2. The Damper
3. The Stepper PWA
4. Track 00 Flag Assembly
5. 10 MB Control PWA
6. AC drive motor with capacitor
7. Motor pulley and belt

AC power is constantly supplied through the disk AC harness to the drive motor from the AC power distribution panel when the power switch is on.

The fixed drive, like the floppy, interfaces to the fixed controller PWA. Then the fixed controller communicates to the CPU. The fixed drive sends the following signals to the fixed controller:

1. Drive Selected (drive's acknowledgement to Drive Selected 1, 2, 3, or 4)
2. Ready (drive up to speed 3125 rpm and no error exists)
3. Index (iductive pickup sensor)
4. Seek Complete (head positioned on specified track)
5. Track 00 (heads positioned on track 00)
6. Write Fault (1. Write current in heads with no write gate from fixed controller; 2. Multiple head select)
7. Read Data (MFM)

The fixed controller sends the following signals to the fixed drive:

1. Drive select 1, 2, 3 or 4 (drive select 4 for fixed, drive select 1 for floppy)
2. Step (commands the stepper motor to move the read/write heads)
3. Direction select (defines the direction the read/write heads will move on a step command)
4. Head select 0 and head select 1 (selects the specific head through ibinary decode)

Sel. 0	Sel. 1	Head
Off	Off	0
On	Off	1
Off	On	2
On	On	3

5. Timing Clock (syncronizes data transfer)
6. Write Gate (enables write current to read/write heads)
7. IW Switch (changes the amount of current due to a need for more current on the outer tracks of the disk. The switch point is at track 128)
8. Write Data (MFM)

Through handshaking of the above signals the drive performs its function of magnetically recording data on the fixed platter and to play back the information that had previously been recorded.

8.11 CP/M INTRODUCTION

The 820 processor is designed to accomodate t CP/M (Control Program for Microcomputers) di operating system. The function of any operati system is to manage the hardware resourc (Keyboard, Printer, Display) and provide fi management capabilities for the application progra intended to be executed on the system.

CP/M is logically divided into four distinct modules:

BIOS (Basic Input/Output System). These are t low level software drivers for the differe hardware devices connected to the system. T BIOS is brought into memory at boot time a remains resident until power is removed. The BI is used by the BDOS. Typical BIOS functions a select disk, set track, set sector read sector, wri sector, get keyboard input and print character printer. The BIOS is usually different on other typ of CP/M compatable computers, because t mechanisms to select discs, print characters et may be different. The BIOS occupies 512 Bytes memory.

BDOS (Basic Disc Operating System). Like the BIC the BDOS is read from disc into memory at bo time and remains resident until power is remove Application Programs (word processing, bas interpreters etc.) interface with the BDOS to utili the hardware resources attached to the syste (print characters, display characters, open disk file close disc files etc.). The BDOS in turn interfac

with the BIOS to accomplish the desired task. The BDOS occupies 3456 Bytes of memory.

CCP (Console Command Processor). The CCP allows the user to view the disc directory, erase files and rename files. The CCP can be overlaid by applications programs. The CCP is used to get the applications program off of the disk into memory to be executed, at this point the CCP is no longer needed as all operating system interface is through BDOS. The CCP occupies 1920 Bytes of memory.

TPA (Transient Program Area). This is the area in memory that applications programs are executed from.

The CP/M operating system provides excellent transportability of software from system to system regardless of the hardware configuration.

NOTE: CP/M is a trademark of Digital Research Inc.

SCHEMATIC DIAGRAMS

820 CPU

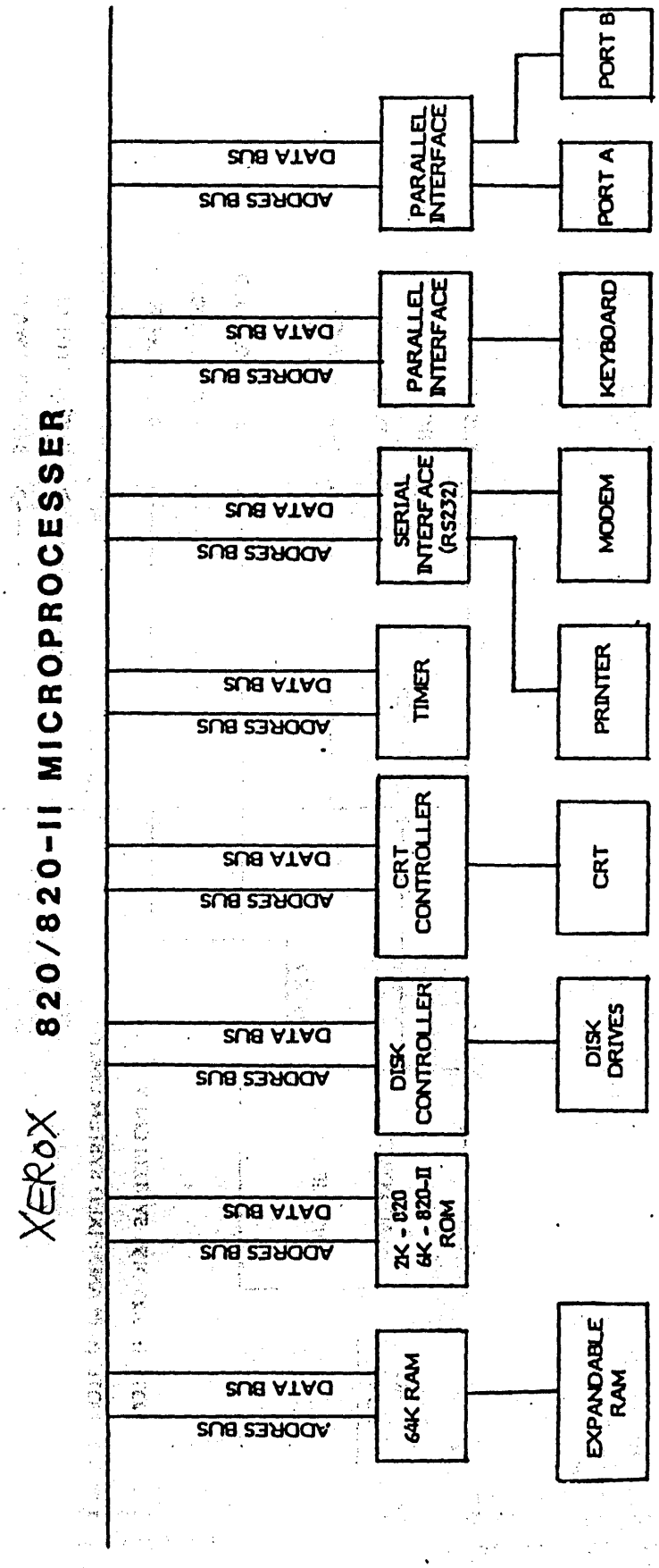
XEROX 820/820-II MICROPROCESSER
ADDRES BUS
DATA BUS
64K RAM
EXPANDABLE RAM
2K - 820
6K - 820-II
ROM
DISK CONTROLLER
DISK DRIVES
CRT CONTROLLER
CRT
TIMER
PRINTER
SERIAL INTERFACE (RS232)
MODEM
PARALLEL INTERFACE
KEYBOARD
PARALLEL INTERFACE
PORT A
PORT B

FIG. 8-1

XEROX 820

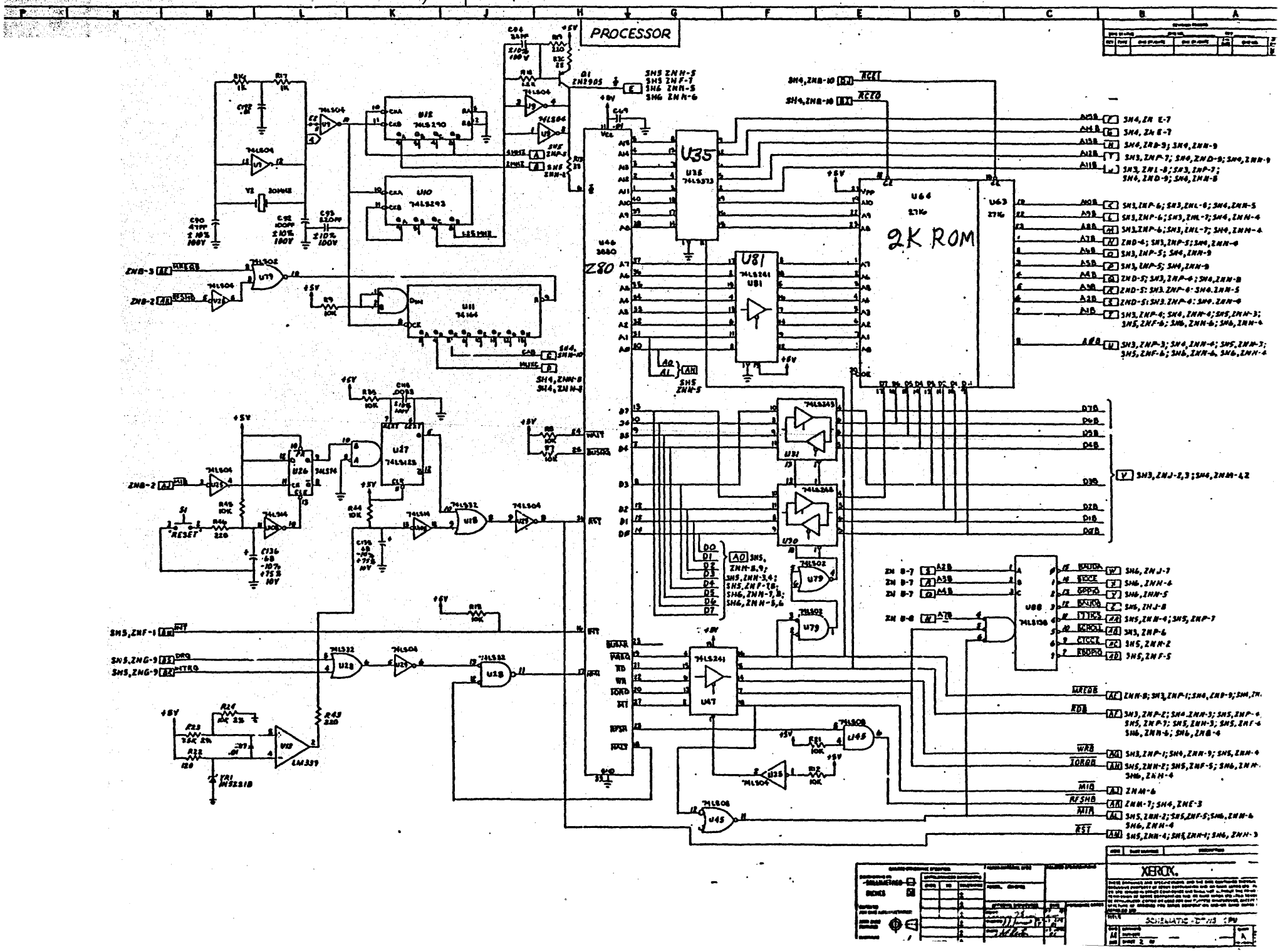
PROCESSOR
U35
74LS373
U64
2716
2K ROM
U63
2716
U81
74LS241
U31
74LS245
U30
74LS245
U47
74LS241
U46
8080
Z80
U12
74LS290
U10
74LS293
U11
74LS164
U27
74LS125
U26
74LS174
U18
74LS132
U28
74LS132
U79
74LS02
U88
74LS138
U45
74LS08
U25
74LS04
U17
LM339
Q1
2N2905
Y2
20MHZ
1.25MHZ
RESET
S1
WREQB
RDB
WRB
IORQB
MIB
RFSHB
MITB
RST
XERO
XERO
SH4,ZNB-10
SH4,ZNB-10
SH5 ZNH-5
SH5 ZNF-1
SH6 ZNH-5
SH6 ZNH-6
SH5 ZNF-5
SH5 ZNH-5
SH4,ZNH-10
SH4,ZNH-8
SH4,ZNH-8
SH5 ZNH-5
SH5,ZNF-1
SH5,ZNG-9
SH5,ZNG-9
SH4,ZN E-7
SH4,ZN E-7
SH4,ZND-9; SH4,ZNH-9
SH3,ZNP-7; SH4,ZND-9; SH4,ZNH-9
SH3,ZNL-8; SH3,ZNP-7; SH4,ZND-9; SH4,ZNH-8
SH3,ZNP-6; SH3,ZNL-8; SH4,ZNH-5
SH3,ZNP-6; SH3,ZNL-7; SH4,ZNH-4
SH3,ZNP-6; SH3,ZNL-7; SH4,ZNH-4
ZND-4; SH3,ZNP-5; SH4,ZNH-4
SH3,ZNP-5; SH4,ZNH-9
SH3,ZNP-5; SH4,ZNH-9
ZND-5; SH3,ZNP-4; SH4,ZNH-8
ZND-5; SH3,ZNP-4; SH4,ZNH-5
ZND-5; SH3,ZNP-4; SH4,ZNH-4
SH3,ZNP-4; SH4,ZNH-4; SH5,ZNH-3; SH5,ZNF-6; SH6,ZNH-6; SH6,ZNH-4
SH3,ZNP-3; SH4,ZNH-4; SH5,ZNH-3; SH5,ZNF-6; SH6,ZNH-6, SH6,ZNH-4
SH3,ZNJ-2,3; SH4,ZNH-42
SH6,ZNJ-7
SH6,ZNH-6
SH6,ZNH-5
SH6,ZNJ-8
SH5,ZNH-4; SH5,ZNP-7
SH3,ZNP-6
SH5,ZNH-2
SH5,ZNF-5
ZNH-8; SH3,ZNP-1; SH4,ZND-9; SH4,ZN
SH3,ZNP-2; SH4,ZNH-3; SH5,ZNP-4; SH5,ZNP-7; SH5,ZNH-3; SH5,ZNF-6; SH6,ZNH-6; SH6,ZNH-4
SH3,ZNP-1; SH4,ZNH-9; SH5,ZNH-4
SH5,ZNH-2; SH5,ZNF-5; SH6,ZNH-4; SH6,ZNH-4
ZNH-6
ZNH-7; SH4,ZNE-3
SH5,ZNH-2; SH5,ZNF-5; SH6,ZNH-6; SH6,ZNH-4
SH5,ZNH-4; SH5,ZNH-1; SH6,ZNH-3
XEROX
SCHEMATIC

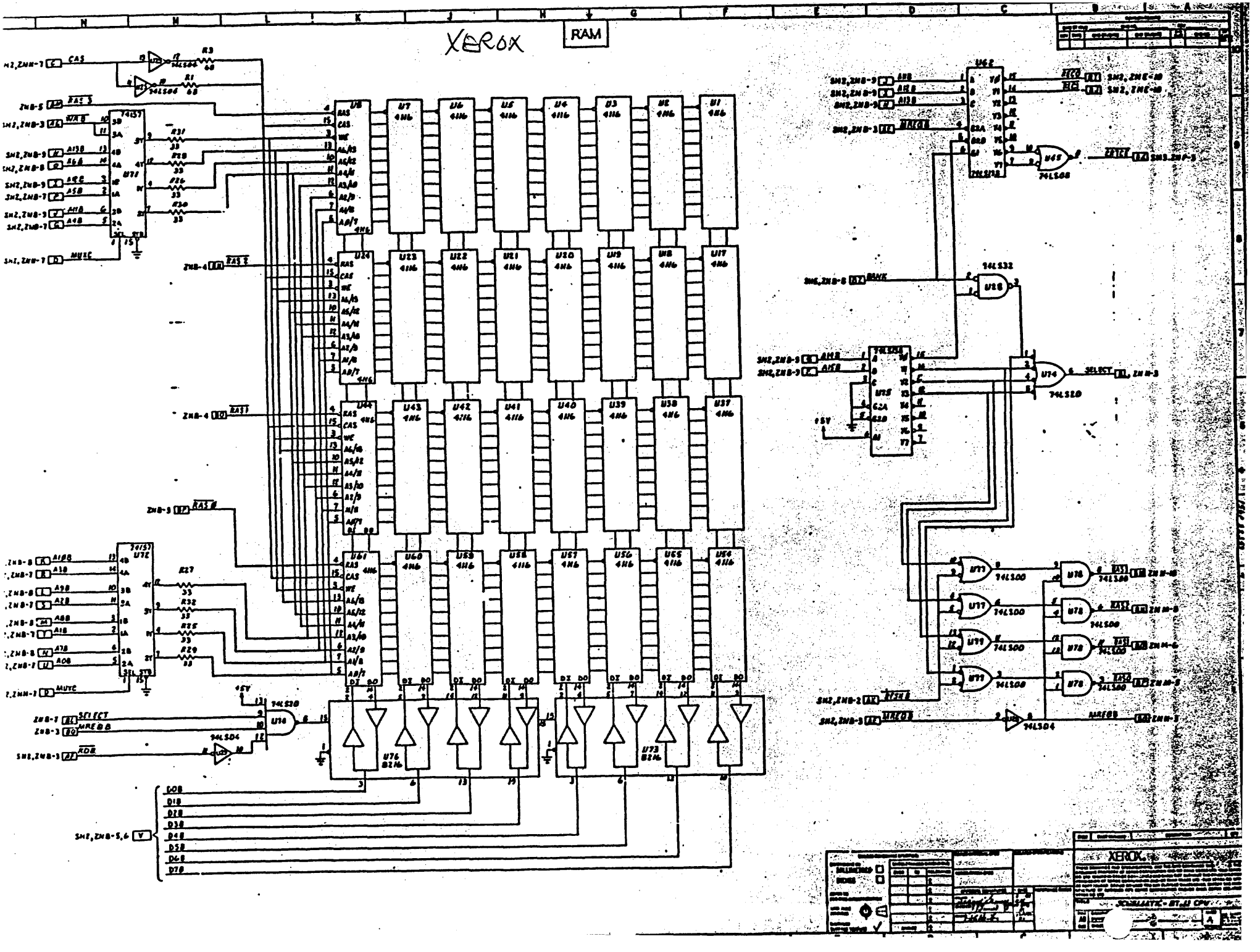
XEROX
RAM
U71
74157
U72
74157
U8
U7
U6
U5
U4
U3
U2
U1
U24
U23
U22
U21
U20
U19
U18
U17
U44
U43
U42
U41
U40
U39
U38
U37
U61
U60
U59
U58
U57
U56
U55
U54
4116
U76
8216
U73
8216
U62
74LS138
U45
74LS08
U26
74LS32
U75
74LS138
U74
74LS20
U77
74LS00
U78
74LS00
U79
74LS04
U14
74LS20
R3
68
R1
68
R31
33
R28
33
R26
33
R30
33
R27
33
R32
33
R25
33
R29
33
CAS
RAS 5
RAS 2
RAS 1
RAS 0
MUXC
MUXC
SELECT
MREQ B
KDB
BANK
RSEL
MREQB
SELECT
SELECT
RAS 5
RAS 2
RAS 1
RAS 0
D0B
D1B
D2B
D3B
D4B
D5B
D6B
D7B
+5V

UNLESS OTHERWISE SPECIFIED:
RESISTANCE VALUES ARE IN OHMS,
± 5%, .25W

CAPACITANCE VALUES ARE IN
MICROFARADS, +80 -20%, 50V

POWER DISTRIBUTION TABLE

REF. DESIGNATIONS	GND	+5	+12	-12	-5
U1-8,17-24,37-44 59-61	16	9	8		1
U9-12,14,16,22,26,28 29-34,36,45,48,49,51,52 53,74,77,79,82,83 87,90,92,98,100,102 103,104,105,110,112,114 115-119	7	14			
U13	12	3			
U15,27,40,50,62, 69-73,75,76,88,89,90 91,93,106,107	8	16			
U35,47,61	10	20			
U46	29	11			
U63,64,92	12	24			
U84-87	9	18			
U96	31	9			
U97	11	2			
U98	5	24			
U101,105	13	26			
U109	20	21	40		1
U111,113	7		14	1	

REFERENCE DESIGNATIONS

LAST USED	NOT USED
C115	C137
E3	
J11	
R69	R34,47
S1	
U119	U63
Q1	
VR2	

1) FOR NORMAL OPERATION SHUNTS TO BE INSTALLED IN THE FOLLOWING POSITIONS

REF DESIG	BETWEEN PINS
E1	1,2
E2	1,2
J9	7/8, 11/12, 15/16 19/20, 23/24 27/28, 31/32 35/36
J10	3/4, 7/8

5 LAST INTERCONNECT LETTER USED "CD"

6 SPARE GATES:

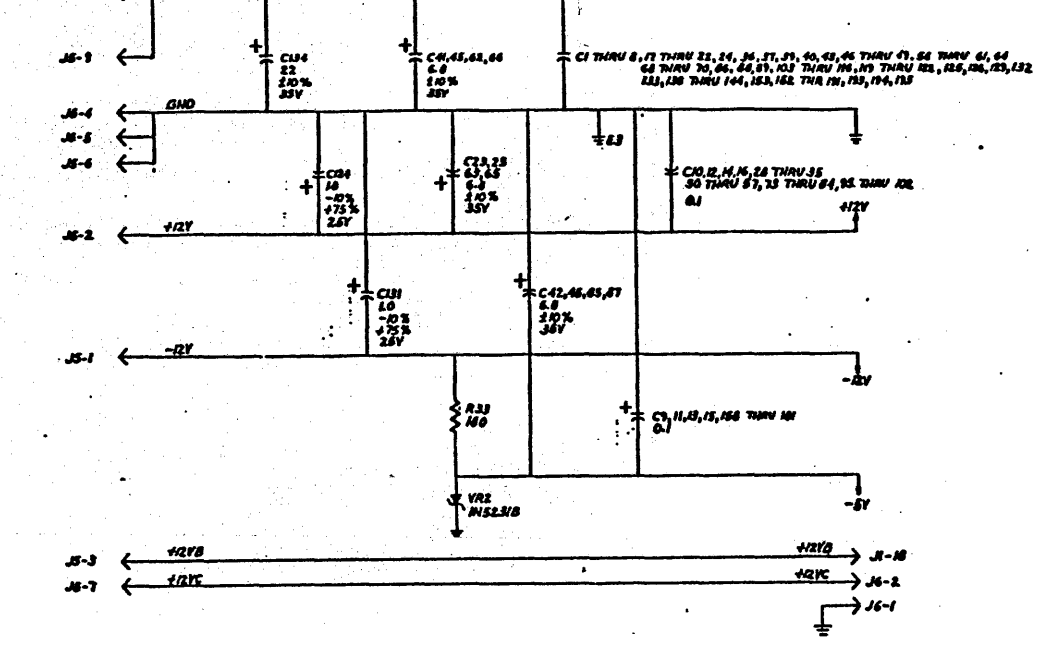

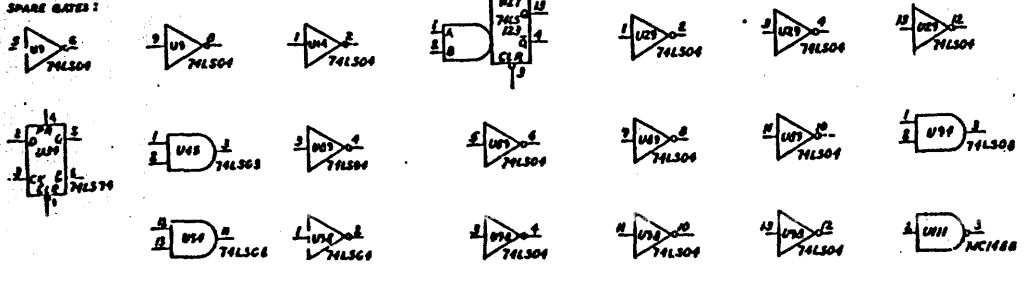

XEROX

SCHEMATIC-DTWS CPU

CRT DISPLAY GEN

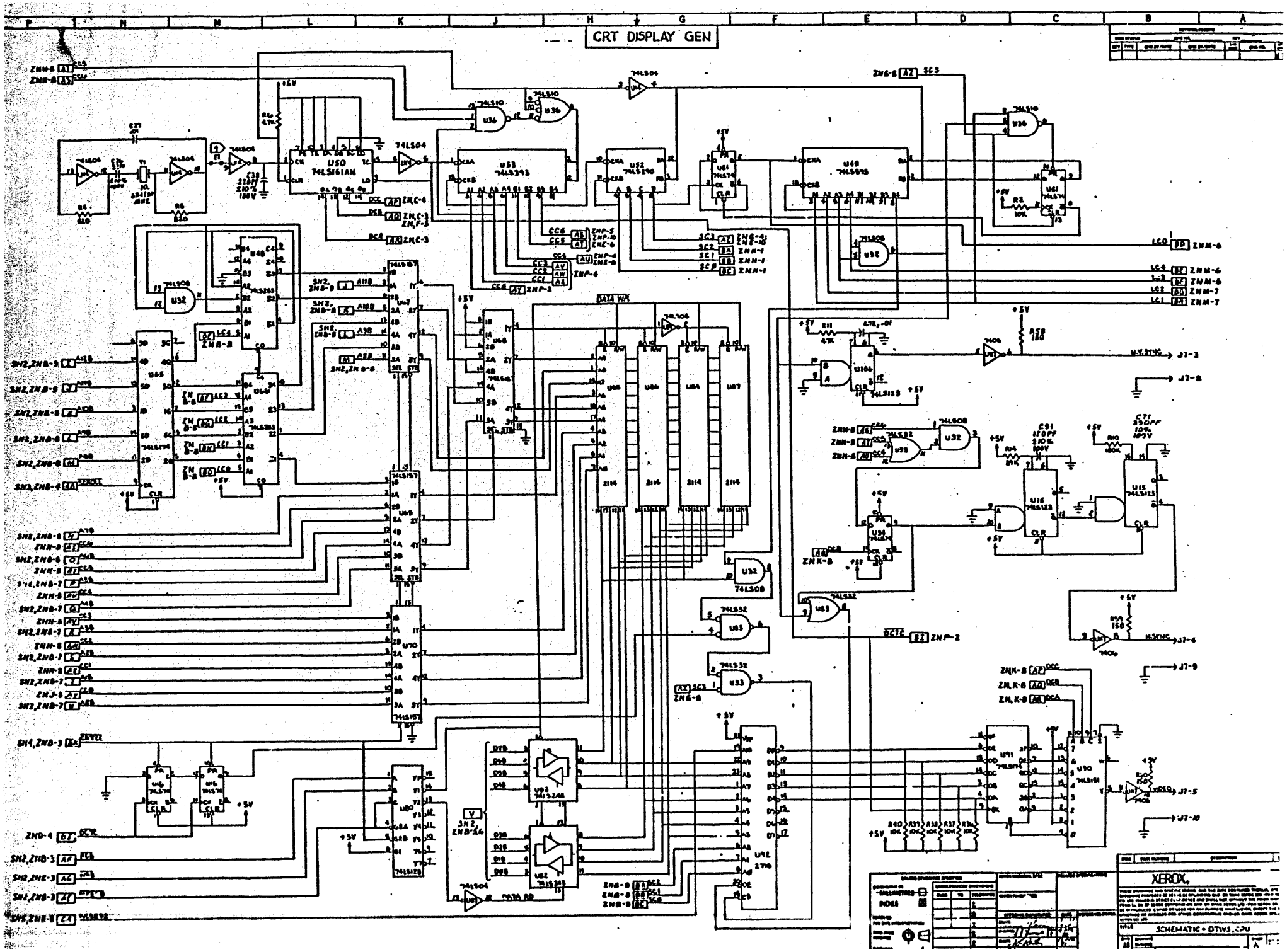

FLOPPY CON'LP
KBD INPUT
CTC

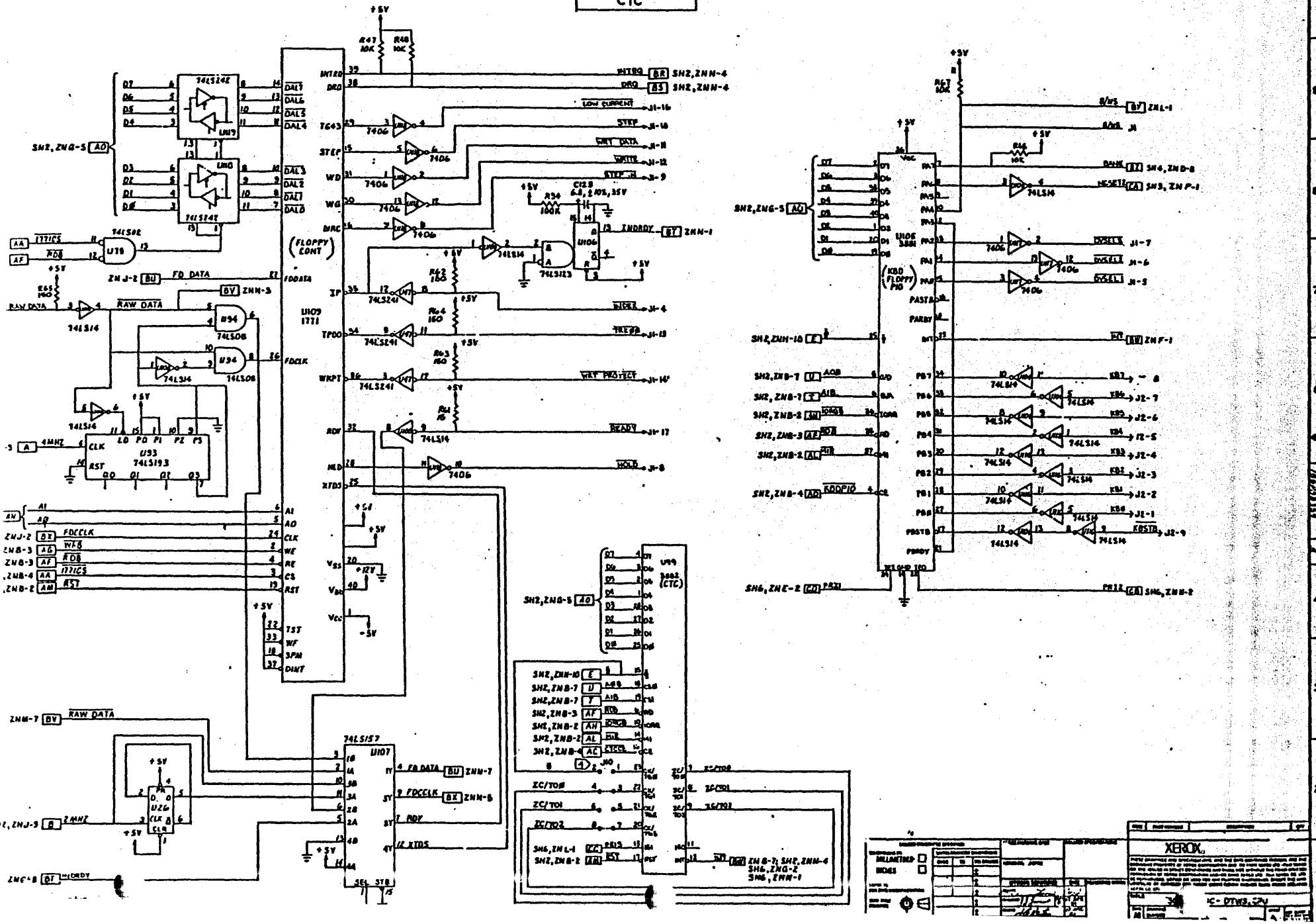

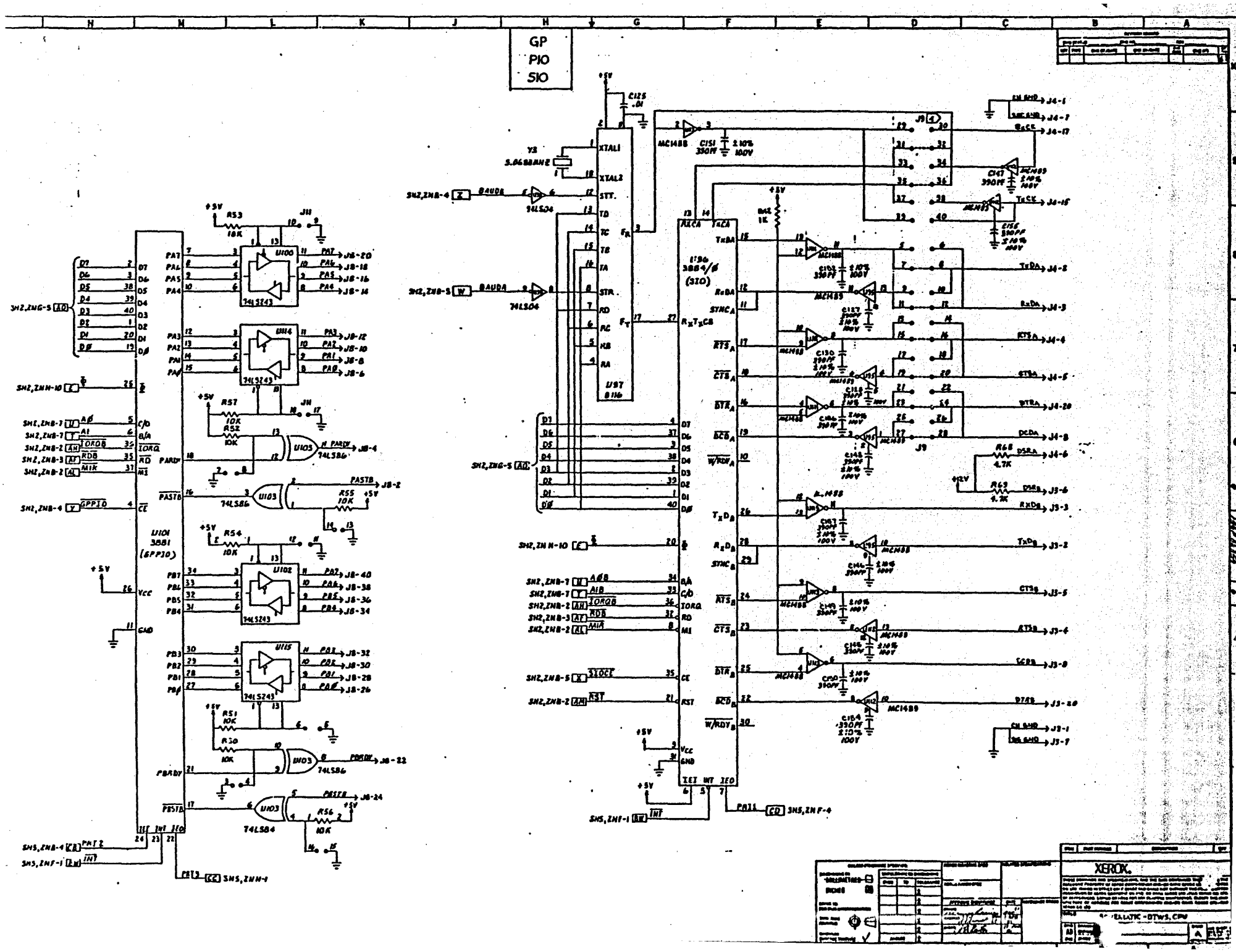
GP
PIO
SIO
U101
3881
(GPPIO)
U97
8116
U96
3884/8
(SIO)
U100
U104
U105
U103
U102
U115
U103
74LS243
74LS86
74LS84
74LS04
MC1488
MC1489
J11
J9
J8
J3
J4
XEROX

820-II CPU

S OTHERWISE SPECIFIED:
ISTANCE VALUES ARE IN OHMS, ±5%, 0.25W
ACITANCE VALUES ARE IN MICROFARADS,
-20%, 50V

R DISTRIBUTION TABLE

DESIGNATIONS	GND	+5	+12	-12
8	16	8		
21, 31, 32, 43, 44, 1, 49, 50, 59-61, 63, 7-76, 77, 79, 80, 82, 5, 87, 90, 91, 93-98,	7	14		
	12	3		
-30, 37-42, 48, 85, 99	8	16		
52, 55, 56, 62, 66	10	20		
	29	11		
-36, 54, 57, 58	12	24		
	31	9		
	11	2	9	
9	5	24		
2, 65	11	26		
68	7		14	1
	12	8		

REFERENCE DESIGNATIONS

USED	NOT USED
	C36-39, 49, 81, 82, 108-117
2	
3	

NORMAL OPERATIONS SHUNTS TO BE
PLACED IN THE FOLLOWING POSITIONS

1	4,2
2	4,2
4	4,2
6	2,3
7	4,2
9	3,8-11, 13-15, 16 / 1,2-20-22, 24-27 / 28-31, 32-35-36
C	314, 716

INTERCONNECT LETTER USEL (CU)

E GATES:

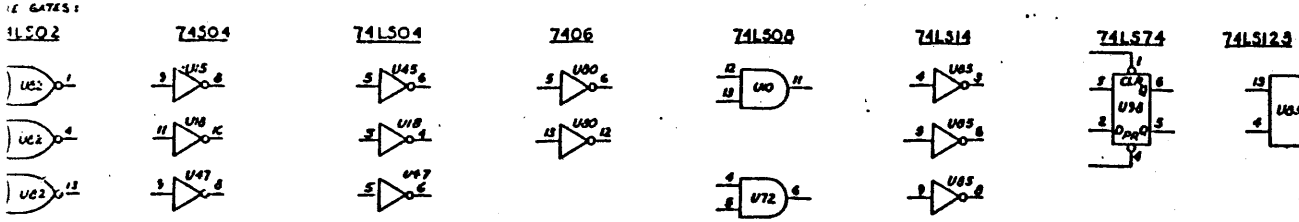

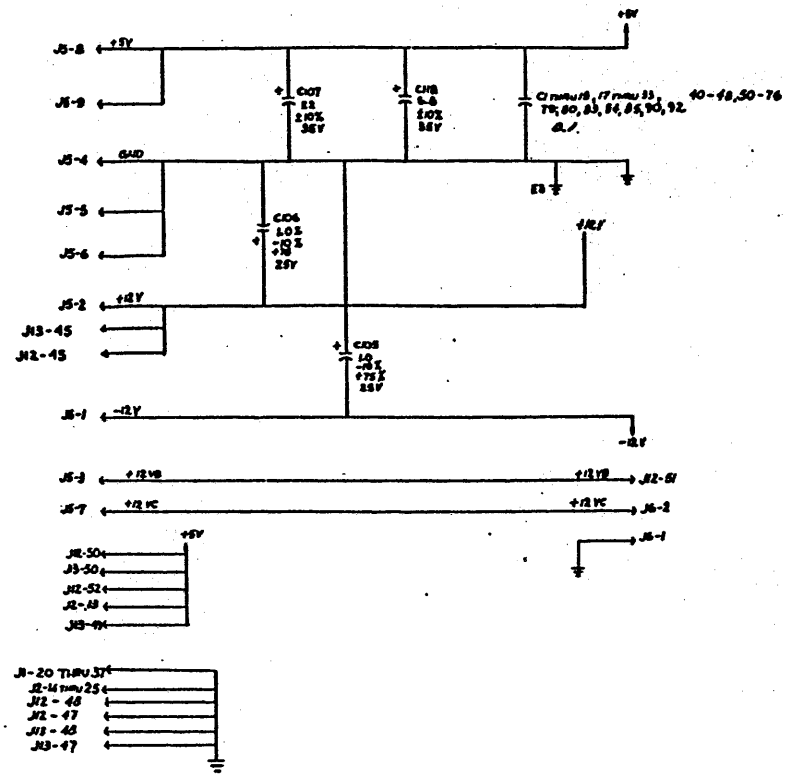

XEROX.

SCHEMATIC - CPU

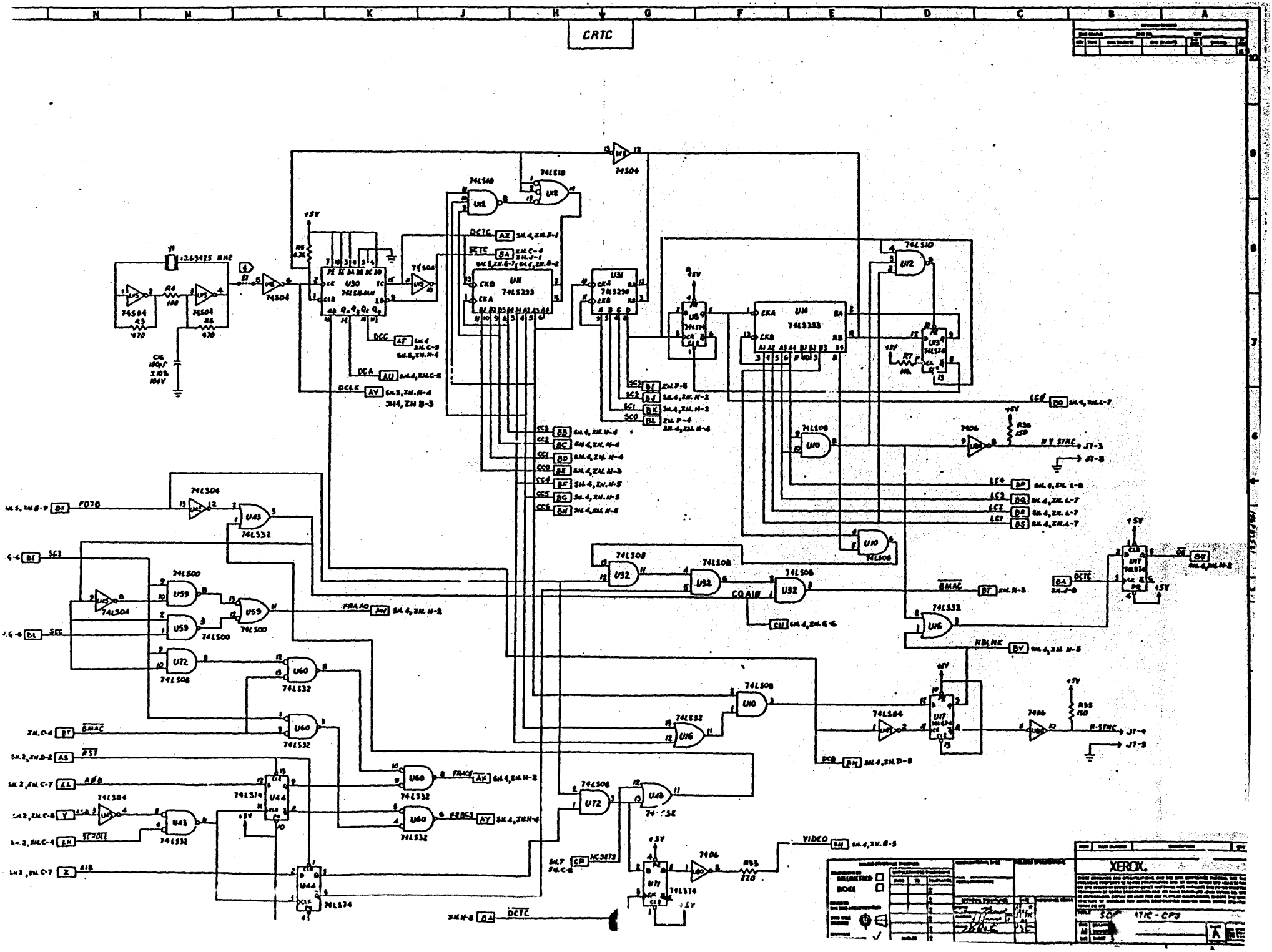
CRTC
XEROX
VIDEO
H-SYNC
NV SYNC
NBLNK
BMAC
DCTC
FDTR
RST
MILLIMETERS
INCHES

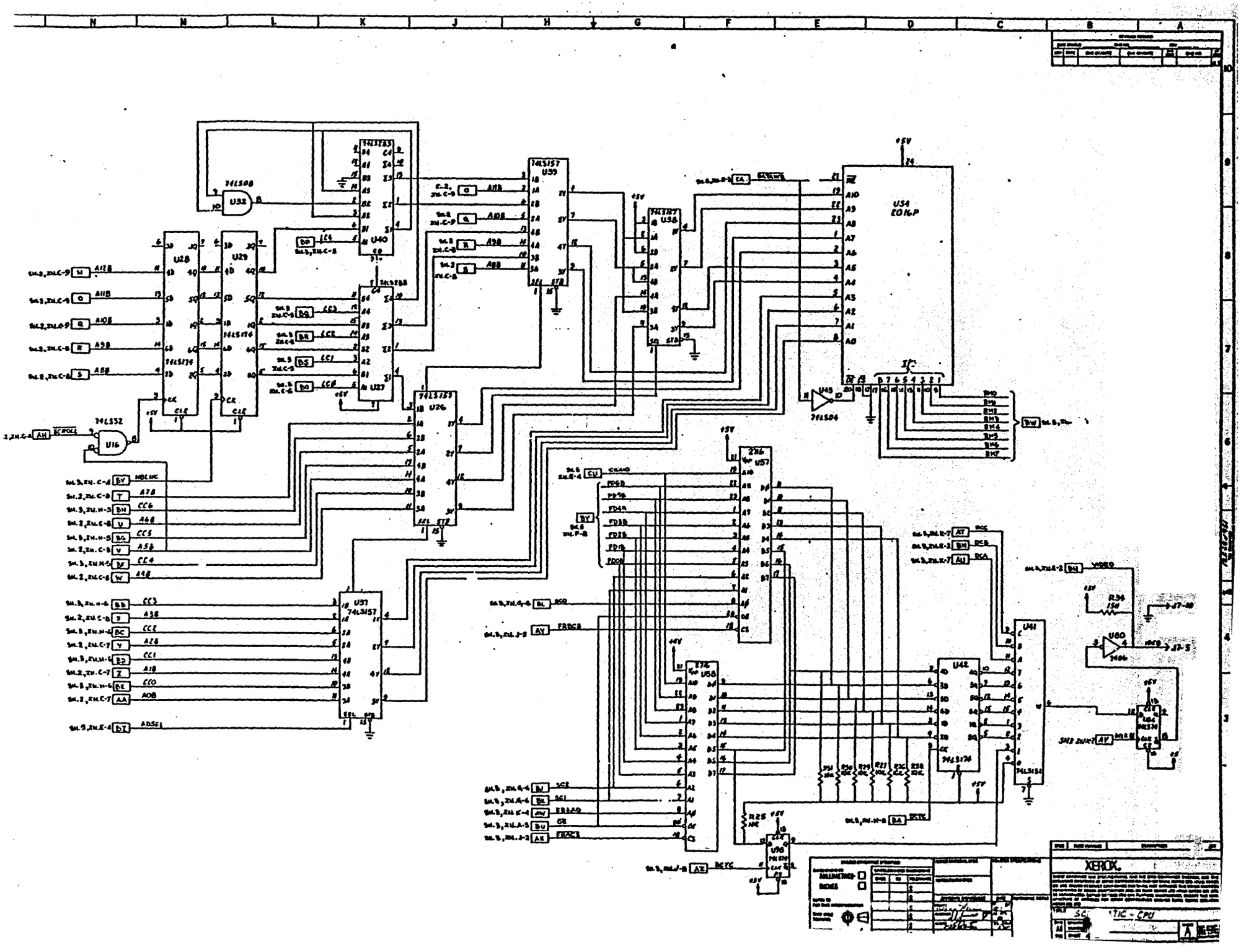
U28
U29
U27
U40
U32
U16
U39
U36
U26
U37
U54
E016P
U45
U57
U58
U42
U41
U80
U76
R34
XEROX

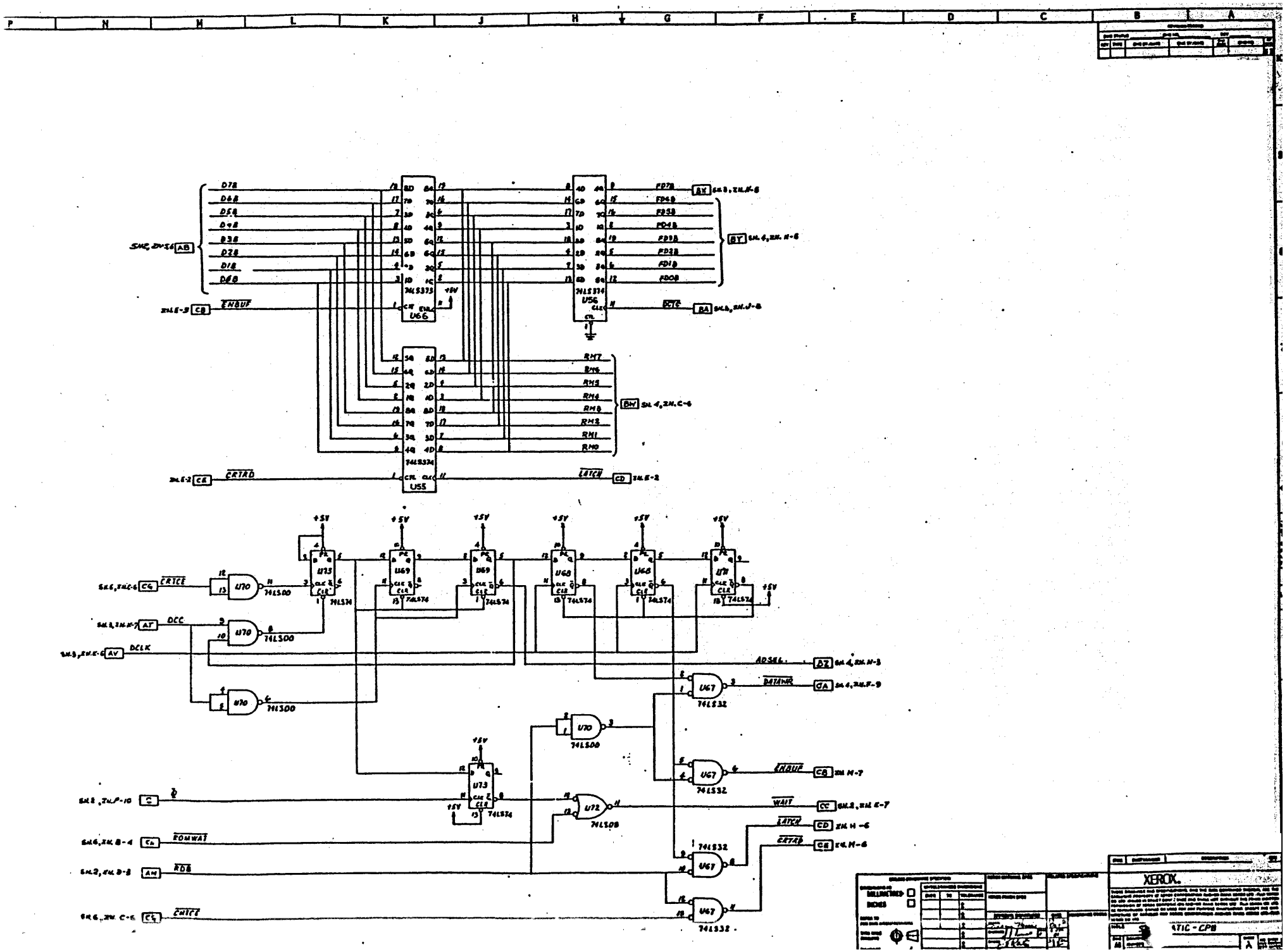
P
N
M
L
K
J
H
G
F
E
D
C
B
A
D7B
D6B
D5B
D4B
D3B
D2B
D1B
D0B
ENBUF
U66
74LS373
U56
74LS374
FD7B
FD6B
FD5B
FD4B
FD3B
FD2B
FD1B
FD0B
BCTC
RM7
RM6
RM5
RM4
RM3
RM2
RM1
RM0
U55
74LS374
CRTAD
LATCH
CRTCE
U70
74LS00
U73
74LS74
U69
U68
U67
74LS32
U72
74LS08
DCC
DCLK
ADSEL
BATANR
ENBUF
WAIT
LATCH
CRTAD
ROMWAT
RDB
CHTCE
+5V
XEROX
STIC - CPB

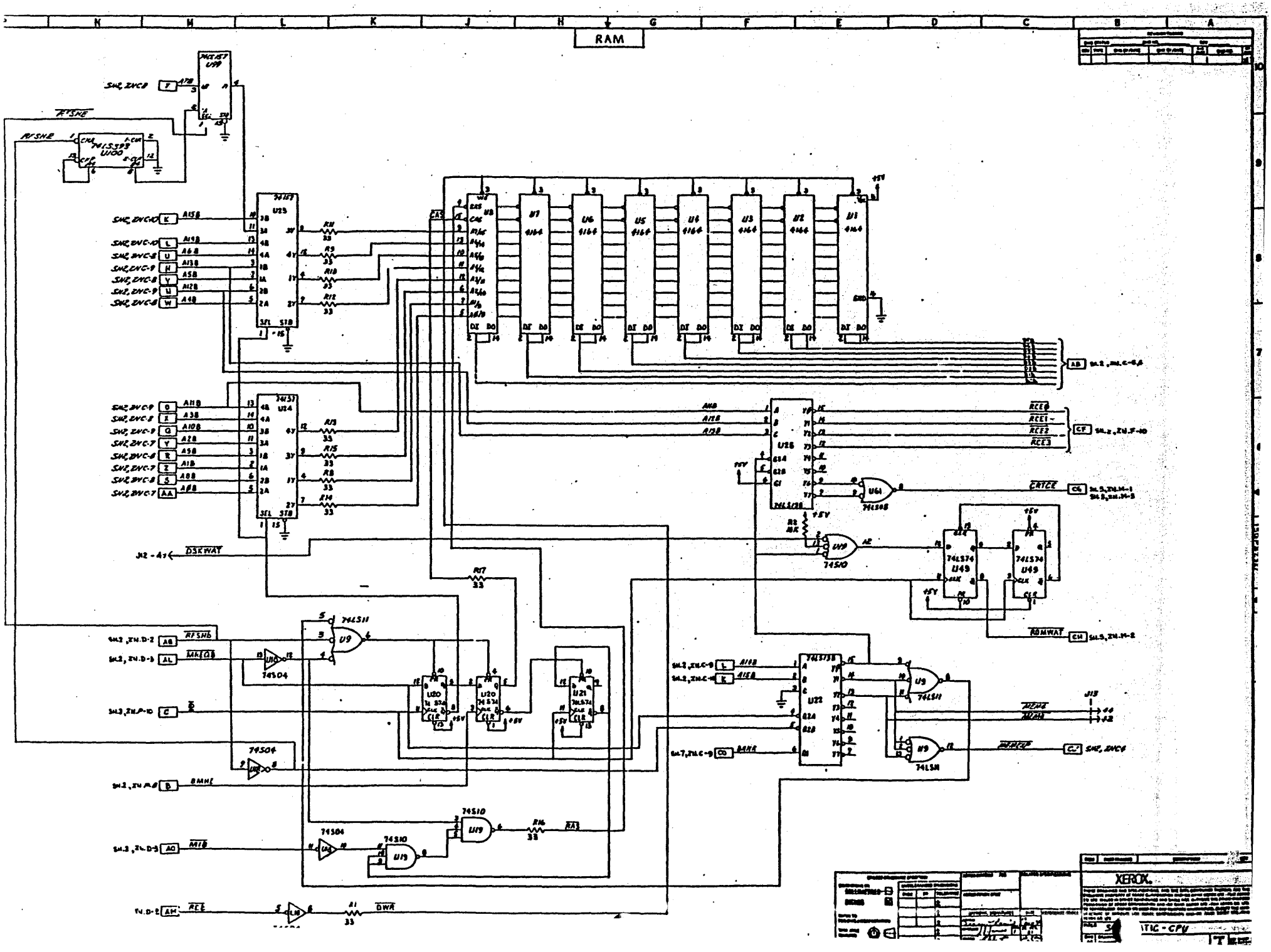
RAM
U25
U24
U7
U6
U5
U4
U3
U2
U1
4164
U26
74LS138
U61
74LS08
U19
74S10
U49
74LS374
U9
74LS11
U20
74S374
U21
U22
74LS138
U8
74LS08
U10
74S04
U15
74S10
U16
74S04
U00
74LS393
U99
74LS157
RCE0
RCE1
RCE2
RCE3
CRTCE
ROMWAT
DSKWAT
RFSHE
MREQE
BMHE
MIE
RCE
DWR
XEROX

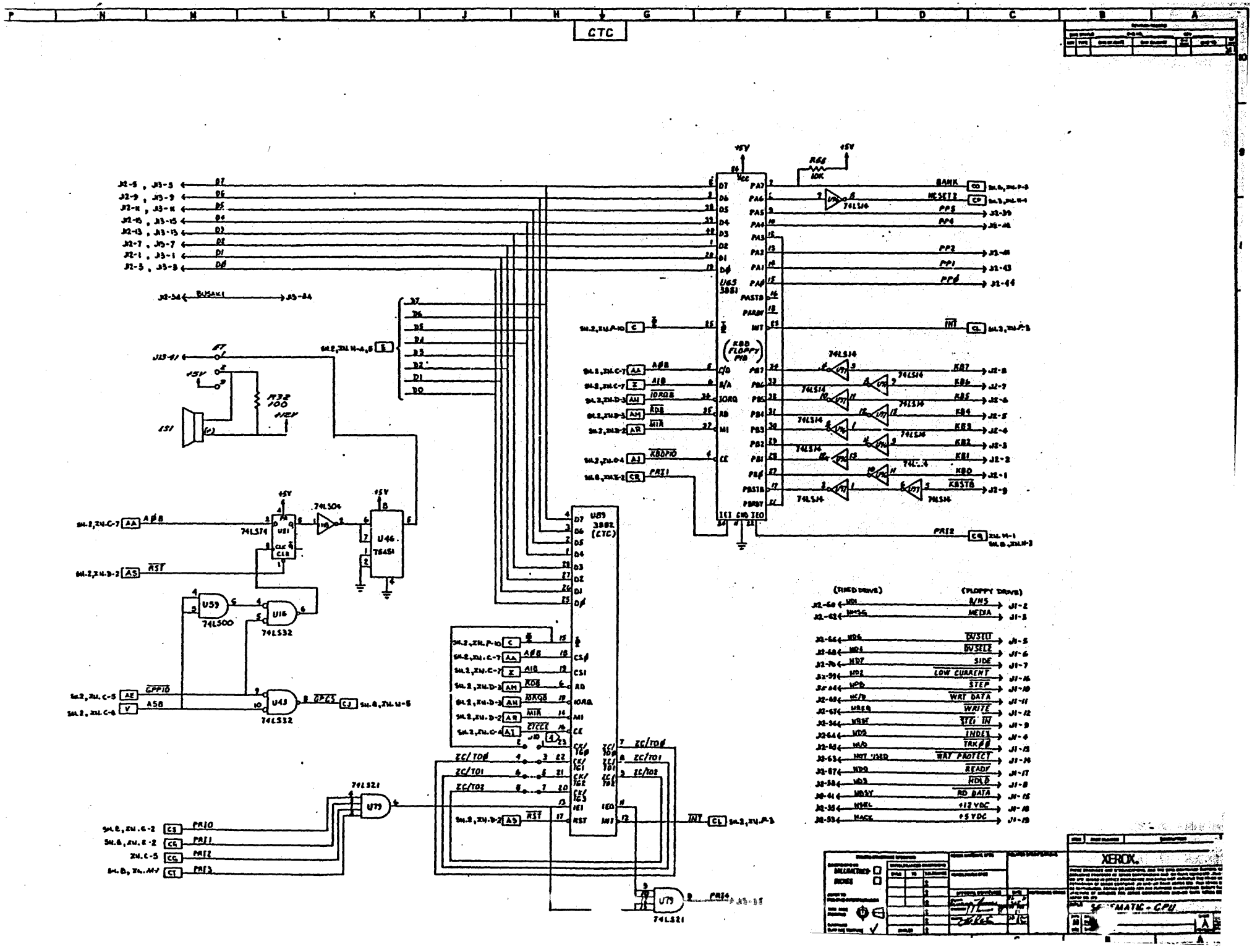
CTC
U89
3882
(CTC)
U65
3881
(KBD FLOPPY PIO)
74LS14
74LS04
74LS00
74LS32
74LS21
U46
76451
U79
(FIXED DRIVE)
(FLOPPY DRIVE)
BANK
MCSELT2
PPS
PP4
PP2
PP1
PP0
INT
KB7
KB6
KB5
KB4
KB3
KB2
KB1
KB0
KBSTB
PRI2
BUSAK1
RST
GPPIO
GPCS
ZC/TO0
ZC/TO1
ZC/TO2
PRI0
PRI1
PRI3
PRI4
BUSSELT
SIDE
LOW CURRENT
STEP
WRT DATA
WRITE
SYS IN
INDEX
TRK00
WRT PROTECT
READY
HOLD
RD DATA
+12 VDC
+5 VDC
XEROX

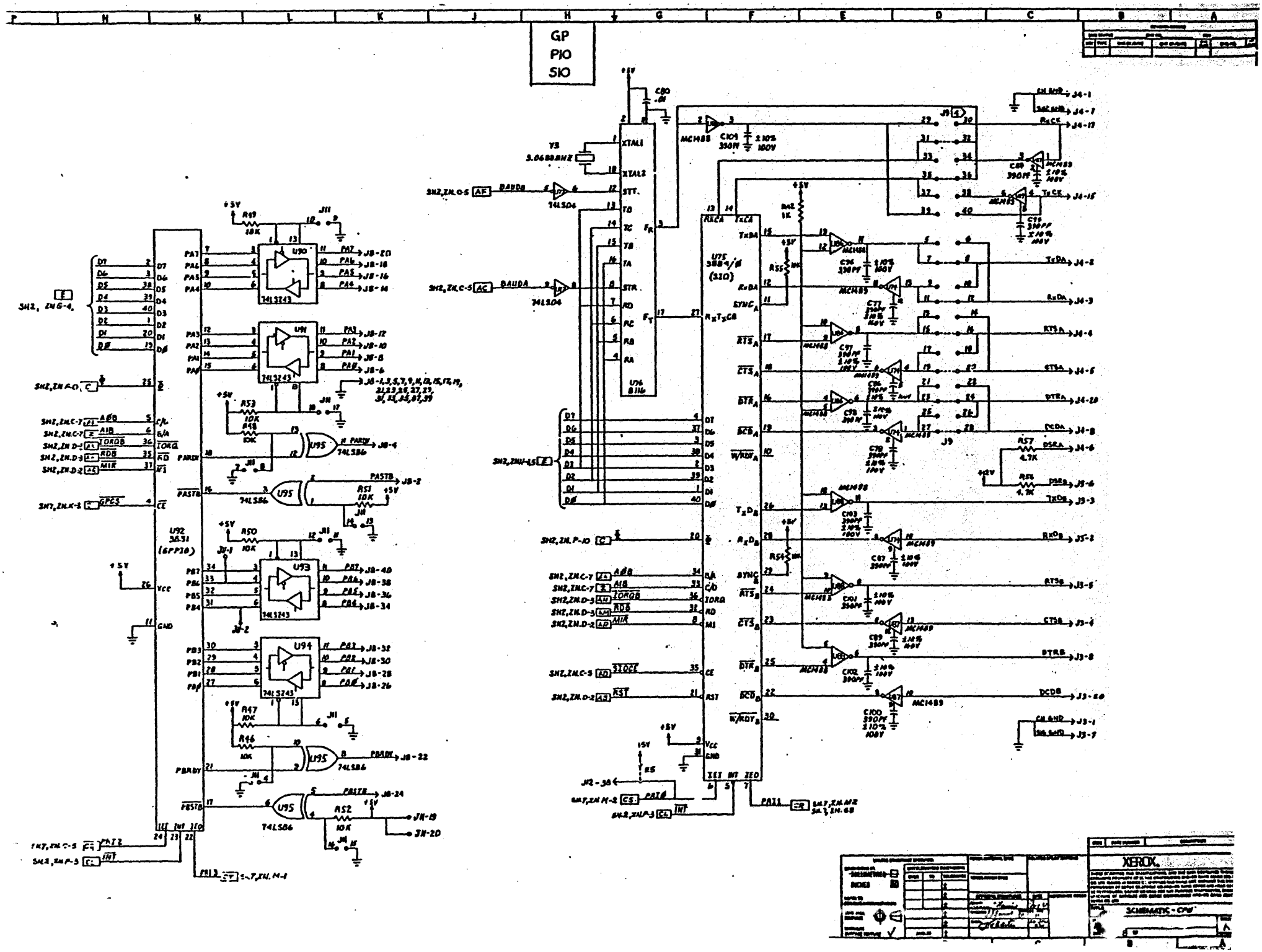
GP
PIO
SIO
U92
3A31
(GPPIO)
U75
3B8 1/8
(SIO)
U76
8116
U90
U91
U93
U94
U95
74LS243
74LS586
74LS04
MC1488
MC1489
Y3
5.0688MHZ
XTAL1
XTAL2
J9
J11
J1
J2
J3
J4
SCHEMATIC - CPU
XEROX

"NOTES" UNLESS OTHERWISE SPECIFIED:

1. RESISTANCE VALUES ARE IN OHMS, ±5%, .25W
2. CAPACITANCE VALUES ARE IN MICROFARADS, +80-20%, 50V
3. POWER DISTRIBUTION TABLE

REF DESIGNATION	GND	+5	+12
U4-U5, U7-U14, U16-U21, U23	7	14	
U1-U3, U15, U22	8	16	
U6	20	21	40

4. REFERENCE DESIGNATIONS

LAST USED	NOT USED
U23	
R11	
C16	

5. LAST INTERCONNECT LETTER USED "N"
6. SPARE GATES:

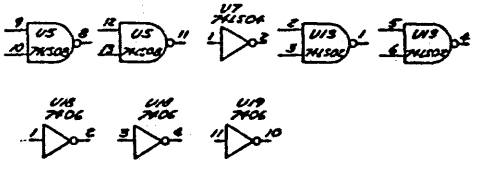

7. FILTER CAPACITORS

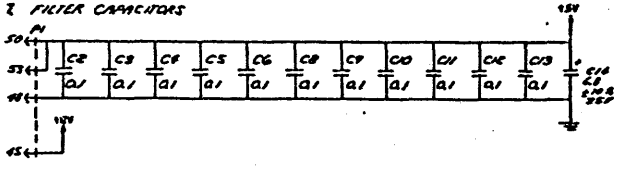

2	SHEET NO.	
SC	SHEET SIZE	
A	SHEET REV	

XEROX.

SCHEMATIC, FLOPPY CONTROLLER

XEROX

RAM

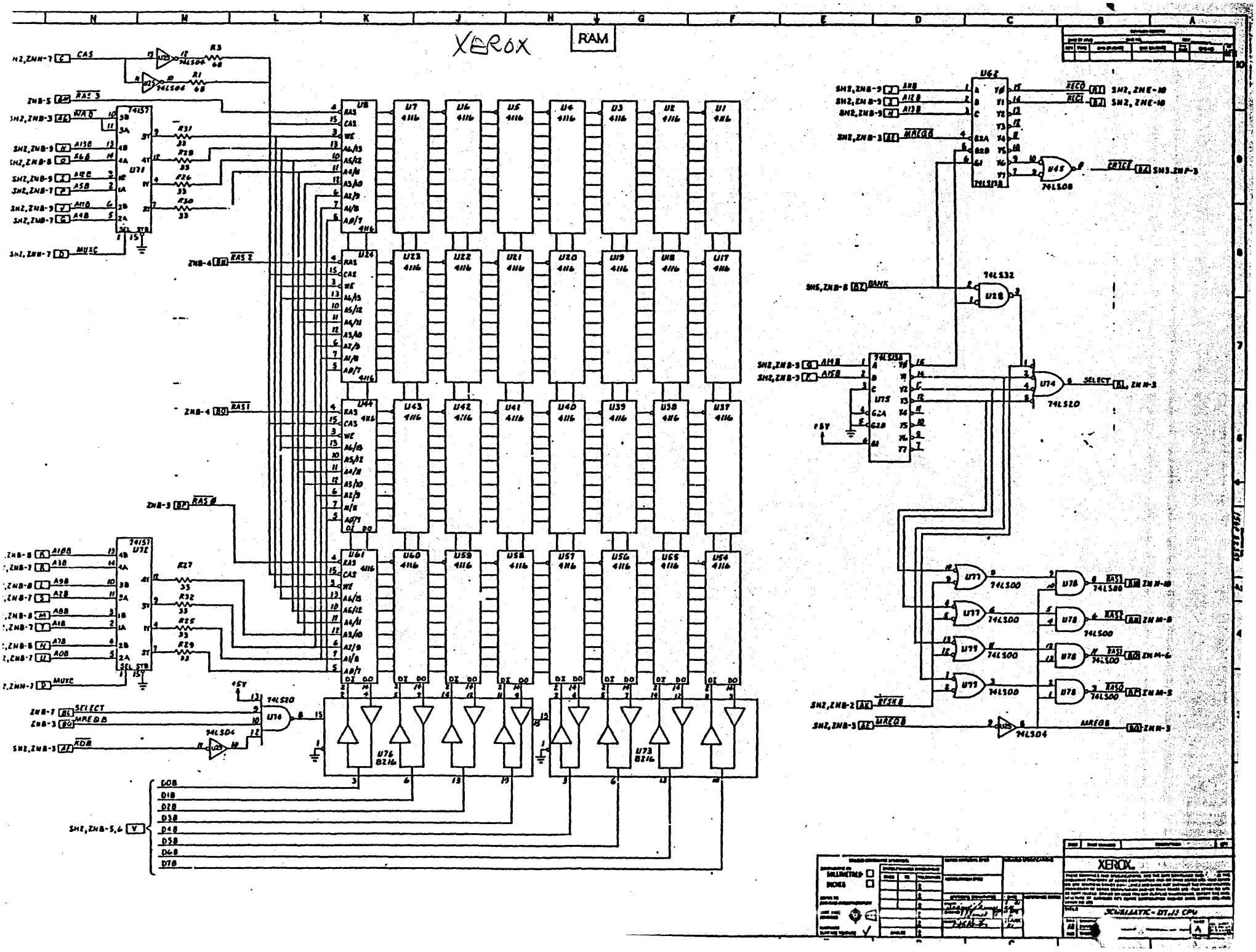
U8 U7 U6 U5 U4 U3 U2 U1
U24 U23 U22 U21 U20 U19 U18 U17
U44 U43 U42 U41 U40 U39 U38 U37
U61 U60 U59 U58 U57 U56 U55 U54
4116
74157
U75
U72
U62
74LS158
U45
74LS08
74LS32
U28
U74
74LS20
U77
74LS00
U78
74LS00
U76
U73
8216
74LS04
74LS20
U16
RAS 3
RAS 2
RAS 1
RAS 0
CAS
MUXC
MREQB
RESHB
SELECT
RDB
BANK
SCHEMATIC - DT.13 CPU

FLOPPY DAUGHTER PWA

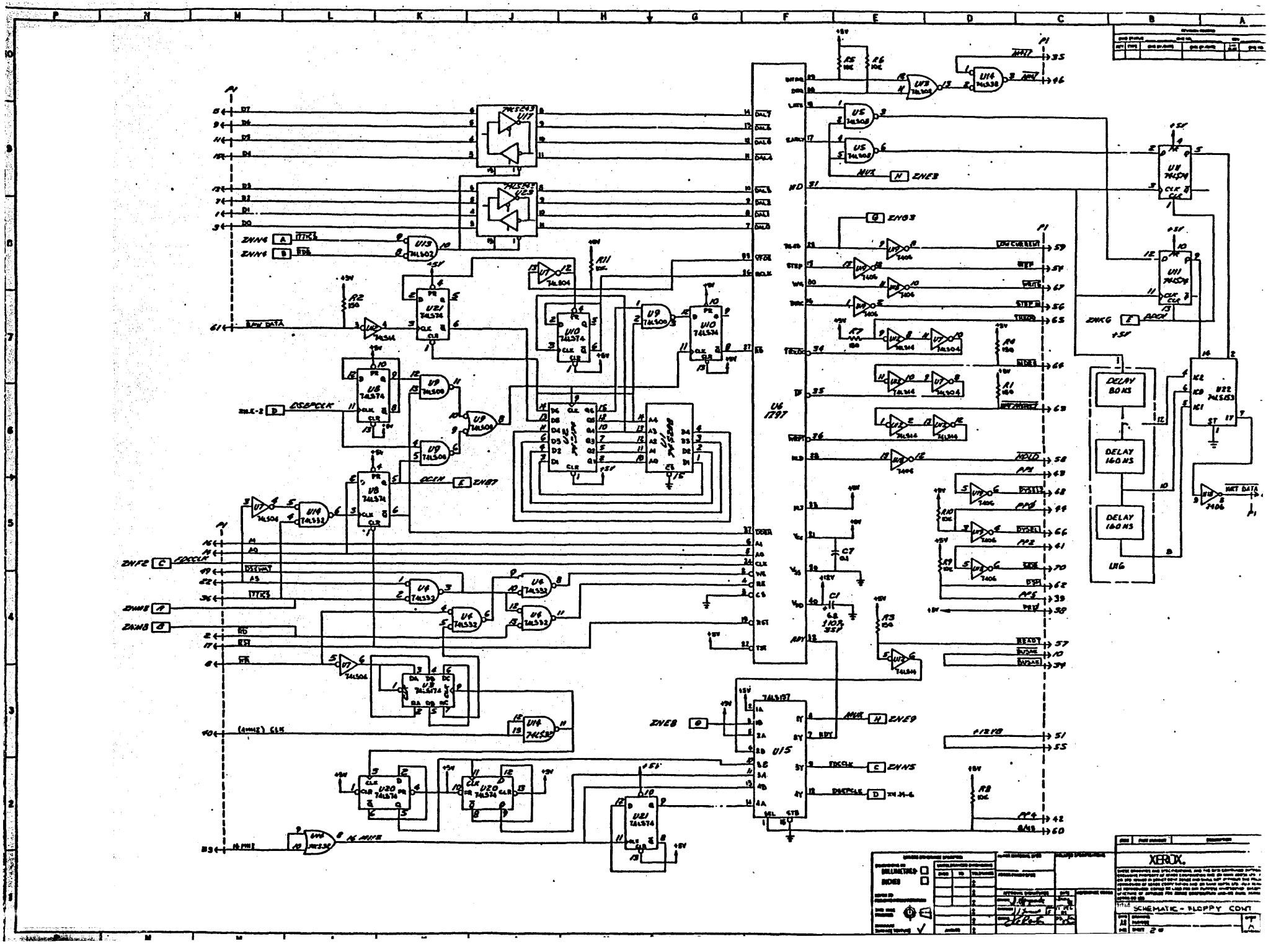
U6
1797
U15
74LS197
U22
74LS153
DELAY
80 NS
DELAY
160 NS
DELAY
160 NS
U16
RAW DATA
WRT DATA
XEROX
SCHEMATIC - FLOPPY CONT

FIXED DAUGHTER PWA

POWER DISTRIBUTION TABLE

REF DESIGNATOR	GND	+5V
U1	10	20
U2-U7, U9-U12	7	14
U8	11	26

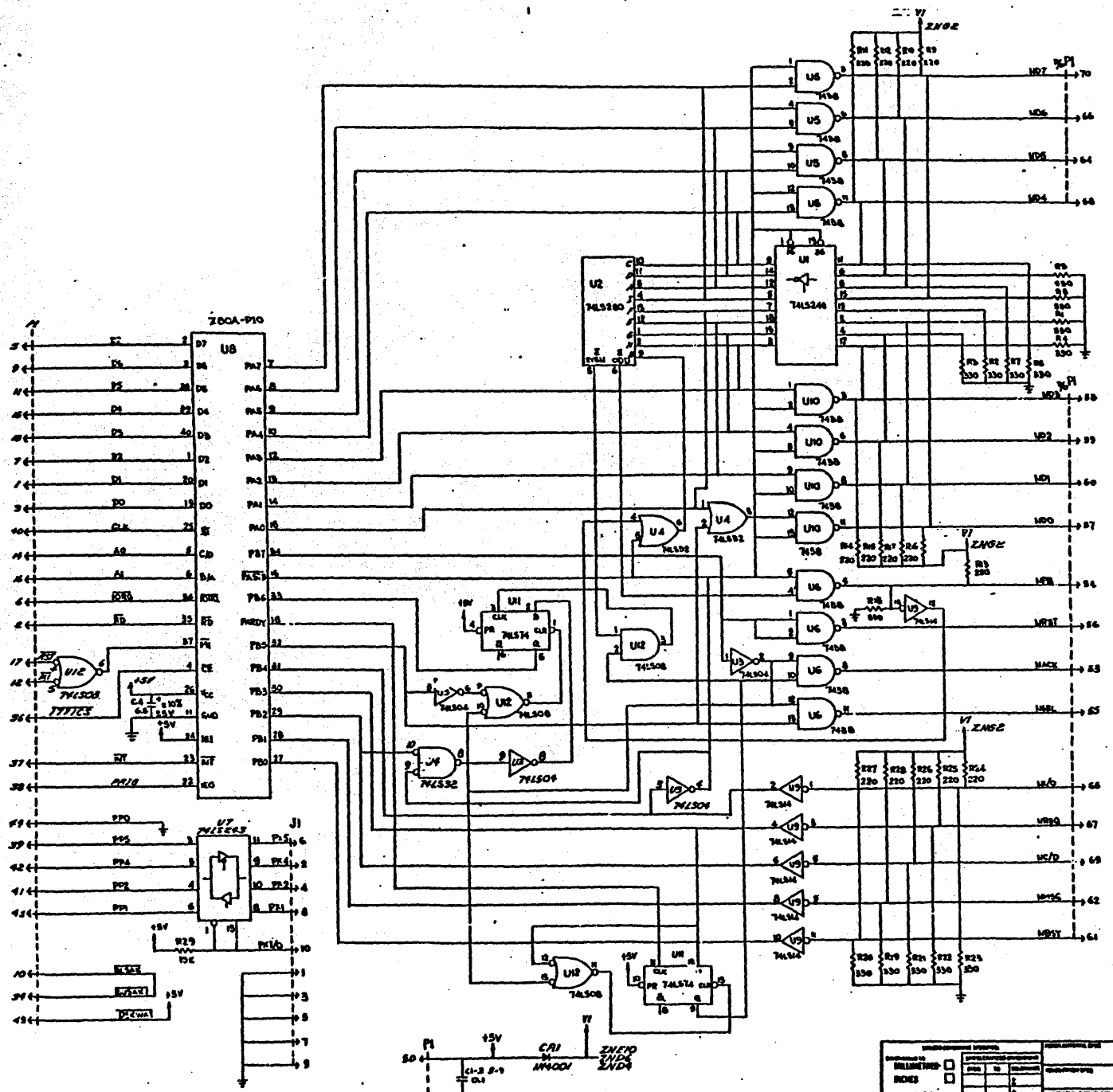

XEROX

SCHEMATIC - RIGID DRIVE INTERFACE

STAPLE

STAPLE

Before stapling please be sure that all information is completed on reverse side

STAPLE

STAPLE

FOLD

First Class
Permit No. 16500
Dallas, Texas

BUSINESS REPLY MAIL

No postage stamp necessary if mailed in the United States

Postage will be paid by:
Xerox Corporation

XEROX CORPORATION
FIELD ENGINEERING
1341 W. MOCKINGBIRD LANE
DALLAS, TEXAS 75247

ATTN; MANAGER FIELD ENGINEERING
MS 303

FOLD

STAPLE

STAPLE

STAPLE

STAPLE

Before stapling please be sure that all information is completed on reverse side

AERUA

PUBLICATION COMMENT SHEET

Use this feedback sheet to make us aware of the strengths and weaknesses of the material you have received. Please comment on adequacy, quality, useability, format, parts of manuals not used, etc. Specific errors or deficiencies should be referenced by page and or page numbers.

Fold on lines, staple and mail to address printed on reverse side. When folded, it forms an envelope. Include folded marked up pages in the envelope or write your comments below.

Name	Job Title	Date	Employee No.	Location Code

Publication Number 600P	Date and Revision of Publication	Title of Publication

Page No./Fig. No.	Description of Error or Deficiency (please be specific)

Please check if answer requested No ☐ Yes ☐

(If yes, be sure to fill in Name, Job Title, Employee No. and Location Code)

Type or print using black pencil or ink