Cat. No. 25-1031

PLUS RS-232 Interface Upgrade Board

Installation Guide

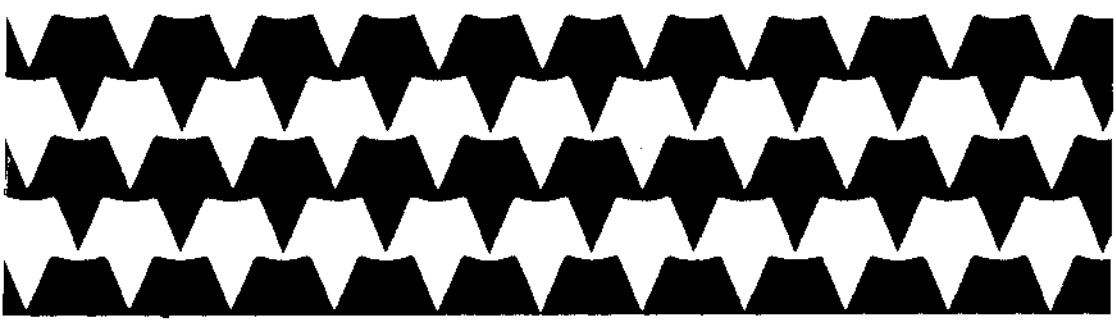

TANDY®

TERMS AND CONDITIONS OF SALE AND LICENSE OF TANDY COMPUTER EQUIPMENT AND SOFTWARE PURCHASED FROM RADIO SHACK COMPANY-OWNED COMPUTER CENTERS, RETAIL STORES AND RADIO SHACK FRANCHISEES OR DEALERS AT THEIR AUTHORIZED LOCATIONS

USA LIMITED WARRANTY

I. CUSTOMER OBLIGATIONS

A. CUSTOMER assumes full responsibility that this computer hardware purchased (the "Equipment"), and any copies of software included with the Equipment or licensed separately (the "Software") meets the specifications, capacity, capabilities, versatility, and other requirements of CUSTOMER.

B. CUSTOMER assumes full responsibility for the condition and effectiveness of the operating environment in which *the Equipment and Software are to function, and for its installation.*

II. LIMITED WARRANTIES AND CONDITIONS OF SALE

A. For a period of ninety (90) calendar days from the date of the Radio Shack sales document received upon purchase of the Equipment, RADIO SHACK warrants to the original CUSTOMER that the Equipment and the medium upon which the Software is stored is free from manufacturing defects. **This warranty is only applicable to purchases of Tandy Equipment by the original customer from Radio Shack company-owned computer centers, retail stores, and Radio Shack franchisees and dealers at their authorized locations.** The warranty is *void if the Equipment or Software has been subjected to improper or abnormal use. If a manufacturing defect is* discovered during the stated warranty period, the defective Equipment must be returned to a Radio Shack Computer Center, a Radio Shack retail store, a participating Radio Shack franchisee or a participating Radio Shack dealer for repair, along with a copy of the sales document or lease agreement. The original CUSTOMER'S sole and exclusive remedy in the event of a defect is limited to the correction of the defect by repair, replacement, or refund of the purchase price, at RADIO SHACK'S election and sole expense. RADIO SHACK has no obligation to replace or repair expendable items.

B. RADIO SHACK *makes no warranty as to the design, capability, capacity, or suitability for use of the Software,* except as provided in this paragraph. Software is licensed on an "AS IS" basis, without warranty. The original CUSTOMER'S exclusive remedy, in the event of a Software manufacturing defect, is its repair or replacement within thirty (30) calendar days of the date of the Radio Shack sales document received upon license of the Software. The defective Software shall be returned to a Radio Shack Computer Center, a Radio Shack retail store, a participating Radio Shack franchisee or Radio Shack dealer along with the sales document.

C. Except as provided herein no employee, agent, franchisee, dealer or other person is authorized to give any *warranties of any nature on behalf of RADIO SHACK.*

D. **EXCEPT AS PROVIDED HEREIN, RADIO SHACK MAKES NO EXPRESS WARRANTIES, AND ANY IMPLIED WARRANTY OF MERCHANTABILITY OR FITNESS FOR A PARTICULAR PURPOSE IS LIMITED IN ITS DURATION TO THE DURATION OF THE WRITTEN LIMITED WARRANTIES SET FORTH HEREIN.**

E. Some states do not allow limitations on how long an implied warranty lasts, so the above limitation(s) may not apply to CUSTOMER.

III. LIMITATION OF LIABILITY

A. **EXCEPT AS PROVIDED HEREIN, RADIO SHACK SHALL HAVE NO LIABILITY OR RESPONSIBILITY TO CUSTOMER OR ANY OTHER PERSON OR ENTITY WITH RESPECT TO ANY LIABILITY, LOSS OR DAMAGE CAUSED OR ALLEGED TO BE CAUSED DIRECTLY OR INDIRECTLY BY "EQUIPMENT" OR "SOFTWARE" SOLD, LEASED, LICENSED OR FURNISHED BY RADIO SHACK, INCLUDING, BUT NOT LIMITED TO, ANY INTERRUPTION OF SERVICE, LOSS OF BUSINESS OR ANTICIPATORY PROFITS OR CONSEQUENTIAL DAMAGES RESULTING FROM THE USE OR OPERATION OF THE "EQUIPMENT" OR "SOFTWARE." IN NO EVENT SHALL RADIO SHACK BE LIABLE FOR LOSS OF PROFITS, OR ANY INDIRECT, SPECIAL, OR CONSEQUENTIAL DAMAGES ARISING OUT OF ANY BREACH OF THIS WARRANTY OR IN ANY MANNER ARISING OUT OF OR CONNECTED WITH THE SALE, LEASE, LICENSE, USE OR ANTICIPATED USE OF THE "EQUIPMENT" OR "SOFTWARE."**
NOTWITHSTANDING THE ABOVE LIMITATIONS AND WARRANTIES, RADIO SHACK'S LIABILITY HEREUNDER FOR DAMAGES INCURRED BY CUSTOMER OR OTHERS SHALL NOT EXCEED THE AMOUNT PAID BY CUSTOMER FOR THE PARTICULAR "EQUIPMENT" OR "SOFTWARE" INVOLVED.

B. RADIO SHACK shall not be liable for any damages caused by delay in delivering or furnishing Equipment and/or Software.

C. No action arising out of any claimed breach of this Warranty or transactions under this Warranty may be brought more than two (2) years after the cause of action has accrued or more than four (4) years after the date of the Radio Shack sales document for the Equipment or Software, whichever first occurs.

D. Some states do not allow the limitation or exclusion of incidental or consequential damages, so the above limitation(s) or exclusion(s) may not apply to CUSTOMER.

IV. SOFTWARE LICENSE

RADIO SHACK grants to CUSTOMER a non-exclusive, paid-up license to use the TANDY Software on **one** computer, subject to the following provisions:

A. Except as otherwise provided in this Software License, applicable copyright laws shall apply to the Software.

B. Title to the medium on which the Software is recorded (cassette and/or diskette) or stored (ROM) is transferred to CUSTOMER, but not title to the Software.

C. CUSTOMER may use Software on a multiuser or network system only if either, the Software is expressly labeled to be for use on a multiuser or network system, or one copy of this software is purchased for each node or terminal on which Software is to be used simultaneously.

D. CUSTOMER shall not use, make, manufacture, or reproduce copies of Software except for use on **one** computer and as is specifically provided in this Software License. Customer is expressly prohibited from disassembling the Software.

E. CUSTOMER is permitted to make additional copies of the Software **only** for backup or archival purposes or if additional copies are required in the operation of **one** computer with the Software, but only to the extent the Software allows a backup copy to be made. However, for TRSDOS Software, CUSTOMER is permitted to make a limited number of additional copies for CUSTOMER'S own use.

F. CUSTOMER may resell or distribute unmodified copies of the Software provided CUSTOMER has purchased one copy of the *Software for each one sold or distributed. The provisions of this Software License shall also be* applicable to third parties receiving copies of the Software from CUSTOMER.

G. All copyright notices shall be retained on all copies of the Software.

V. APPLICABILITY OF WARRANTY

A. The terms and conditions of this Warranty are applicable as between RADIO SHACK and CUSTOMER to either a sale of the Equipment and/or Software License to CUSTOMER or to a transaction whereby Radio Shack sells or conveys such Equipment to a third party for lease to CUSTOMER.

B. *The limitations of liability and Warranty provisions herein shall inure to the benefit of RADIO SHACK, the author,* owner and or licensor of the Software and any manufacturer of the Equipment sold by Radio Shack.

VI. STATE LAW RIGHTS

The warranties granted herein give the **original** CUSTOMER specific legal rights, and the **original** CUSTOMER may have other rights which vary from state to state.

4/87

The FCC Wants You to Know

This equipment generates and uses radio frequency energy. If not installed and used properly, that is in strict accordance with the manufacturer's instructions, it may cause interference to radio and television reception.

It has been type tested and found to comply with the limits for a Class B computing device in accordance with the specifications in Subpart J of Part 15 of FCC Rules, which are designed to provide reasonable protection against such interference in a residential installation. However, there is no guarantee that interference will not occur in a particular installation.

If this equipment does cause interference to radio or television reception, which can be determined by turning the equipment off and on, the user is encouraged to try to correct the interference by one or more of the following measures:

- Reorient the receiving antenna
- Relocate the computer with respect to the receiver
- Move the computer away from the receiver
- Plug the computer into a different outlet so that computer and receiver are on different branch circuits.

Warning

This equipment has been certified to comply with the limits for a Class B computing device, pursuant to Subpart J of Part 15 of FCC Rules. Only peripherals (computer input/ouput devices, terminals, printers, etc.) certified to comply with the Class B limits may be attached to this computer. Operation with non-certified peripherals is likely to result in interference to radio and TV reception.

2/86

PLUS RS-232 Interface Upgrade Board Installation Guide:
© 1986 Tandy Corporation
All Rights Reserved.

Reproduction or use, without express written permission from Tandy Corporation, of any portion of this manual is prohibited. While reasonable efforts have been taken in the preparation of this manual to assure its accuracy, Tandy Corporation assumes no liability resulting from any errors in or omissions from this manual, or from the use of the information contained herein.

Tandy, Radio Shack, and DeskMate are registered trademarks of Tandy Corporation.
CompuServe is a registered trademark of CompuServe, Inc.
Dow Jones News/Retrieval is a registered trademark of Dow Jones & Co.,Inc.

10 9 8 7 6 5 4 3 2 1

Contents

Introduction 1
- For the Beginner 1
- For the Advanced User 2
- How to Use This Manual 2
- Features of the RS-232 Board 3
- I/O Port Selection 4

Installation 5
- Connecting the RS-232 Board to a Memory Board 5
- Installing the RS-232/Memory Combination Board in the Computer 8
- Installing the RS-232 Board in the Tandy 1000 EX 10
- Connecting the RS-232 Board to a Memory Board in the Tandy 1000 EX 13

Programming Information 15
- Operation Modes 15
- Line Control Register 18
- Programmable Baud-Rate Generator 19
- Line Status Register (LSR) 22
- Interrupt Identification Register (IIR) 24
- Interrupt Enable Register (IER) 26
- MODEM Control Register (MCR) 27
- MODEM Status Register (MSR) 29
- Receiver Buffer Register 30
- Transmitter Holding Register 31

Specifications 33

Schematic Diagram 35

Introduction

For the Beginner

(What Does the RS-232 Do?)

Your new Tandy® RS-232 PLUS Interface Upgrade Board is an RS-232 standard input/output (I/O) interface that enables you to connect serial data I/O devices (modem, printer, plotter, etc.) to your Tandy 1000- or 3000- series computer. The board greatly expands the communication capabilities of your computer when you use it with an external modem and the appropriate software so that you can:

- Access major information services (subscription to a service is required)
- "Talk" with other computers as either a host or a terminal computer
- Use serial printers and plotters

After you install the RS-232 Board and connect another computer (or some other external device), remember that communication is not automatic. It requires an application program written especially to operate, or drive, that device.

Commercially available programs include the driver so that all you have to do is load and run the program. For example, you can begin RS-232 communication by taking advantage of Telecom, a telecommunications feature included with DeskMate. Telecom lets you access Dow Jones News/Retrieval, CompuServe, and other information services.

But what does the RS-232 board itself really do that enables communication? Simple. At the communication source, it takes parallel data (characters transmitted along several paths at the same time) and converts it to serial data (characters transmitted one at a time along one path). At the receiving end, it converts the data back.

The advantages of serial transmission are that it requires only one transmission path and that it eliminates problems of data synchronization associated with parallel transmission.

For the Advanced User

Your RS-232 board incorporates an Asynchronous Communications Element (ACE) that performs the serial-to-parallel and parallel-to-serial data conversions. The features of this ACE are discussed in the chapter "Programming Information."

To use a non-standard RS-232 device, you need to write a special device driver for it. The chapter on programming the ACE provides the information you need.

The ACE has a baud rate generator that you can program to operation from 50 baud to 9600 baud. You can also program the ACE to add or remove start bits, stop bits, and parity bits. It supports 5-, 6-, 7-, or 8-bit characters with 1, 1-1/2, or 2 stop bits.

How To Use This Manual

If you want to use a modem with commercially available telecommunications programs or other serial devices, use this manual only if you decide to install the RS-232 board yourself. Follow the instructions in the "Installation" section carefully, and see your serial device owner's manual and application program manual for any other information you need.

If you want to write your own telecommunications program, see "Technical Information" for information about the ACE chip characteristics. This section provides the information necessary for writing a driver program to permit custom operation of non-standard peripherals.

Features of the RS-232 Board

After unpacking RS-232 board, you should find:

① Port Select DIP switches assign the I/O port addresses for devices connected to RS-232 Board.

② DB 25 Jack connects the RS-232 board to an external device. Use the RS-232C standard serial interface cable for connection.

③ Pin Socket connects the RS-232 board to the row of pins on the Memory PLUS Expansion Board (Radio Shack Cat. No. 25-1011), the PLUS Upgrade Adapter Board (25-1016), or the Memory PLUS Expansion Adapter (25-1062) used in the Tandy 1000 EX Personal Computer, or the expansion connector of the Tandy 1000 EX computer.

④ Stand-Offs secure the RS-232 board to the expansion board.

⑤ Bracket A replaces the current bracket of the expansion board.

⑥ Bracket B is used for installing the RS-232 board in the Tandy 1000 EX.

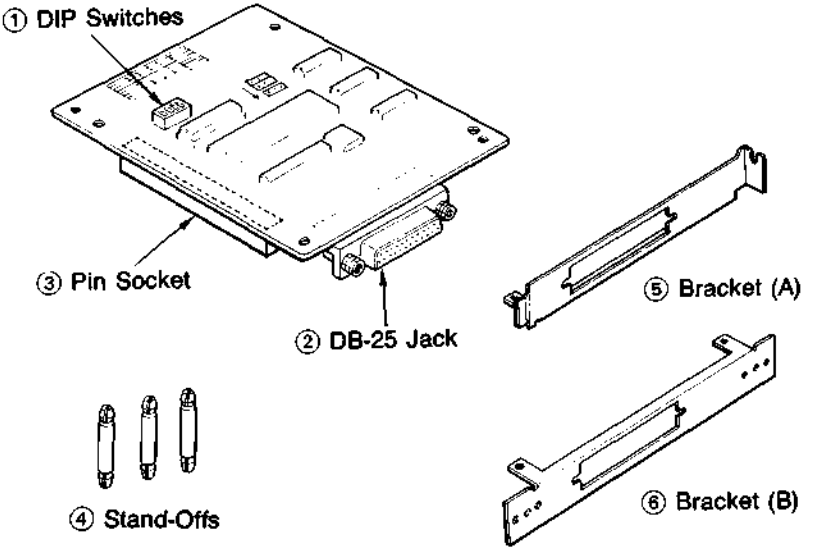

The RS-232 board packet includes a name label. Use this label for future reference by attaching it to the rear panel of your computer or on the bracket after the installation.

I/O Port Selection

DIP switches let you assign the I/O address spaces for each board in case you use several serial devices at the same time. At the factory, the switches are set at COM1, which takes the I/O address spaces of 3F8-3FF.

Table 1. I/O Port Selection

Port	COM1	COM2	COM3		COM4	
Address	3F8-3FF	2F8-2FF	3E8-3EF		2E8-2EF	
Interrupt Signal	IRQ4	IRQ3	IRQ4	IRQ2	IRQ3	IRQ5
DIP Switch Position	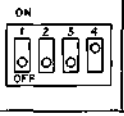	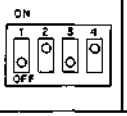	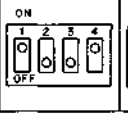	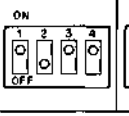	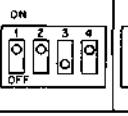	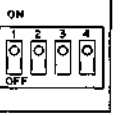

If you plan to use only one serial device, you do not have to change the setting. However, if you have already installed a serial printer or another serial device etc., change the position of the switches to set the board to COM2 (or COM3/COM4 accordingly, in the case of several devices in use).

Depending on the switch setting, one of the interrupt signals IRQ2-IRQ5 is output to your computer to inform it of the I/O unit's condition. Because COM3 and COM4 can be set in two ways — each having different interrupt signals — select either setting, referring to your computer owner's manual.

Notes:
1. Setting all switches to OFF position disables any interrupt signal.
2. On Tandy 3000-series computers, do not set the switches to use IRQ2 for interrupt signals. When you have to set the board to COM3, set it for IRQ4, or disable the interrupt signal by setting all the switches to OFF position.
3. On Tandy 1000-series computers, do not set the switches to use IRQ5 for interrupt signals. When you have to set the board to COM4, set it for IRQ3, or disable the interrupt signal by setting all the switches to OFF position.

Do not stand on a carpeted floor when you handle the RS-232 board. Walking on carpets promotes the build up of static electricity, which, if discharged while you are handling a circuit board, can destroy integrated circuits (ICs) on the board. Touch a grounded metal object before handling any circuit board to avoid static electricity buildup.

This chapter will show you how to install your RS-232 Board in your computer when you want to:

Connect the RS-232 Board to a Memory Board	**Example 1**
Install an RS-232/Memory Combination Board	**Example 2**
Install the RS-232 Board in the Tandy 1000 EX	**Example 3**
Install the RS-232 Board and a Memory Board in the Tandy 1000 EX	**Example 4**

We strongly recommend that you have the RS-232 board installed by the service technicians at your Radio Shack Service Center. Doing so not only ensures expert installation but also enables the technicians to quickly check that all the equipment is functioning properly.

If, however, you do decide to install the boards yourself, follow the instructions in this manual exactly. Details on installation will vary from computer to computer. Within the following description, please refer to your computer's installation manual as well.

Example 1. Connecting the RS-232 Board to a Memory Board

Your RS-232 Board plugs into the Memory PLUS Expansion Board (25-1011), and the memory board plugs into one of the slots on the computer's main logic board. (The RS-232 Board can also be used with the PLUS Upgrade Adapter Board (25-1016)).

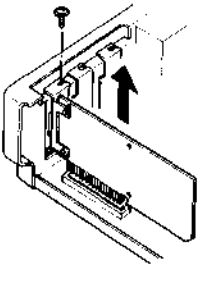

1. If your Memory PLUS Expansion Board is already installed, turn off your computer, and disconnect all the peripherals. Wait at least 10 seconds before handling the board.

   Remove the computer cover by unfastening the screws and sliding it toward the front of the unit. Remove the screw that fastens the board to the computer. Remove the memory board from the sock-

et on the main logic board of the computer by grasping it on the upper edge.

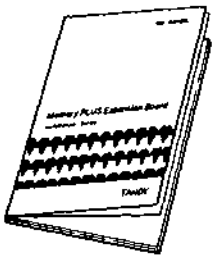

2. If you plan to install additional memory, you might need to remove the jumper on your memory board and add memory ICs to the board.

   If so, perform these steps now so that you do not have to remove the RS-232 board later. See your Memory PLUS Expansion Board Installation Guide for information on reconfiguring the jumper and installing the ICs.

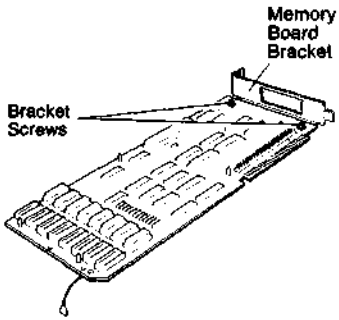

3. The memory board comes with a metal bracket. To install the RS-232 board, you must replace this bracket with the one supplied with the RS-232 board—Bracket A.

   Remove the 2 screws that secure the bracket. Remove the bracket, and save it with the screws for future use.

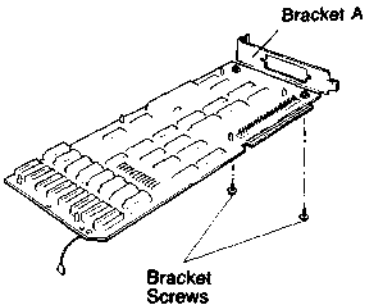

4. Attach Bracket A to the memory board, and secure its right and left edges as shown. Do not overtighten the screws.

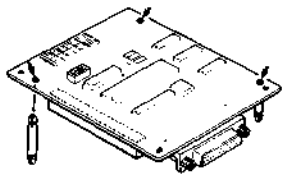

5. Packaged with the RS-232 board are 3 nylon stand-offs used to help support the RS-232 board. Insert the larger end of each stand-off into one of the holes on the RS-232 Board.

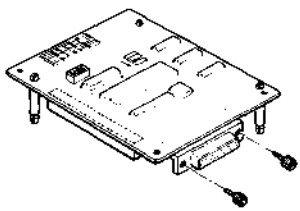

6. Using pliers, loosen and remove the hexagonal nut screws from the RS-232 board. Save the removed screws. You will use them in Step 8.

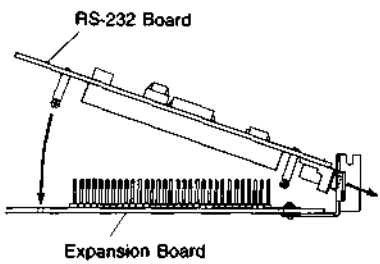

7. Hold the RS-232 board at a slight angle to the memory board so that its DB-25 jack fits into the cutout. Be sure not to strip off the metal holder that is attached to the DB-25 jack.

   Carefully align the RS-232 board's pin socket over the row of pins on the memory board. Then slowly lower the board onto the pins, maintaining the alignment so that the pins go into the corresponding holes on the socket.

   When the board is completely seated and parallel to the memory board, check that all pins are fully inserted into the socket. If you encounter any resistance, stop. Do not force the board. It might have a bent pin that requires repair by a Radio Shack technician.

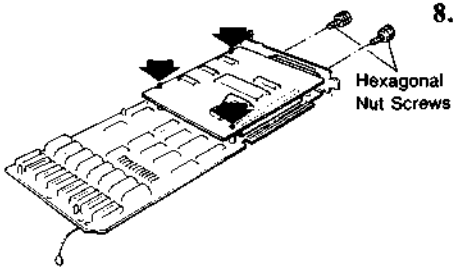

8. Snap each stand-off into the corresponding hole on the memory board by applying pressure to the RS-232 board. Using the hexagonal nut screws you removed in Step 6, secure the DB-25 jack to the mounting bracket.

You are now ready to install your RS-232 Board/memory combination board onto the computer's main logic board.

Example 2. Installing the RS-232/Memory Combination Board in the Computer

Turn off your computer and disconnect all the equipment. If any unit is on, you might damage the central processing unit or the board. Wait at least 10 seconds before removing or inserting any board into the computer.

Be sure to touch a grounded metal object before beginning the installation, and do not stand on a carpeted floor.

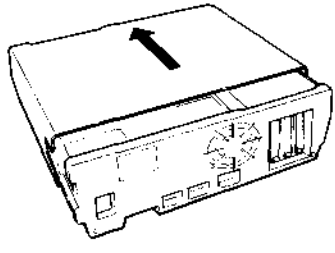

1. Remove the computer cover by unfastening the screws and sliding the cover toward the front of the unit.

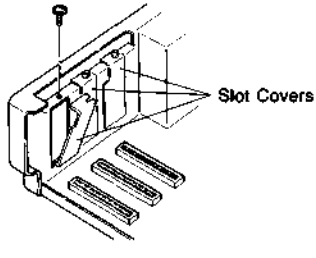

2. Rotate the main unit so that the rear panel faces you. Select one of the unused slots, and remove its slot cover by unfastening the screw. Store the removed slot cover for future replacement.

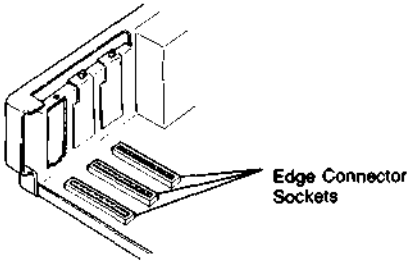

On the main logic board, directly behind the slot cover, is a thin edge connector socket.

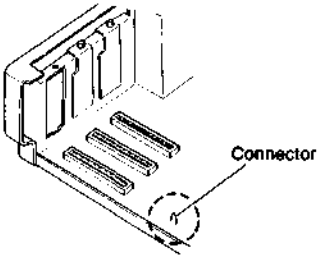

3. As you look at the computer from the rear, check the upper right corner of the main logic board for a small, multi-pronged metal connector.

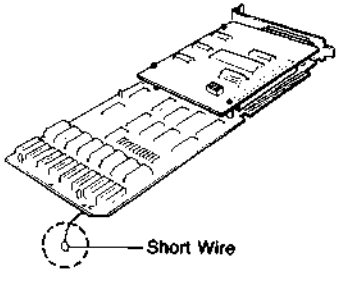

If your board does not have the connector, remove the short wire attached to one corner of your memory board. You do not need it.

If your board has the connector, do not remove the wire. You will connect this in Step 6.

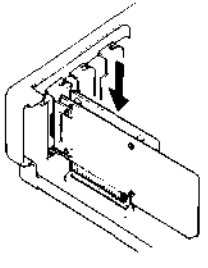

4. Touch a grounded metal object. Then, grasp the combination board by its upper edges, and position it above the socket. Insert the combination board's bracket into the slot in the same way the slot covers are mounted. At the same time, apply downward pressure evenly, engaging the edge connector in the socket.

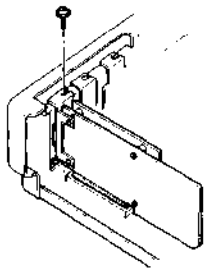

5. Align the board's bracket so the cutout is positioned over the screw hole. Replace the screw you removed earlier. Do not overtighten it.

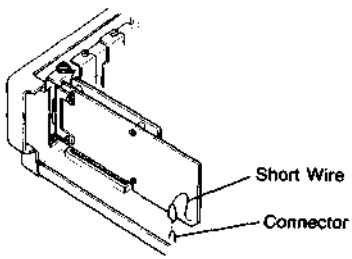

6. If you did not remove the wire mentioned in Step 3, fasten the free end of it to one prong of the multi-pronged connector.

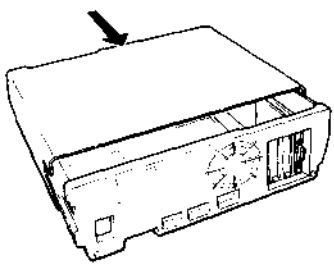

7. Replace the computer's cover, securing it with the screws previously removed.

8. Plug the cable from your serial device into the DB-25 jack. See your application and device manuals for information about using your specific serial devices.

Example 3. Installing the RS-232 Board in the Tandy 1000 EX

The second bracket in your RS-232 board package (Bracket B) is specially designed for use with the Tandy 1000 EX. If you do not plan to install a memory board when you install the RS-232 Board, you can mount the RS-232 board directly on the computer's main logic board. If you plan to install the Memory PLUS Expansion Adapter (25-1062) in addition to the RS-232 board, or if the memory board is already installed, you must mount the RS-232 board on that board (Refer to Example 4).

To install the RS-232 board only:

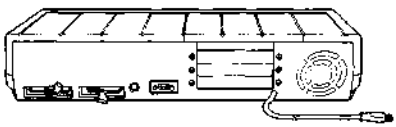

1. Turn off all equipment and disconnect any peripherals.

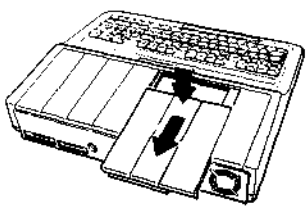

2. With the rear panel of the computer facing you, remove the option slot cover located on the top panel. Place your thumb on the edge nearest the front of the computer, and press down to disengage the hook-latch. Then, slide the cover toward you.

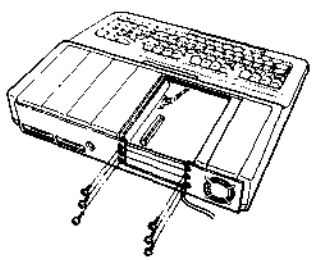

3. Remove the option slot cover on the rear panel by removing the 6 screws.

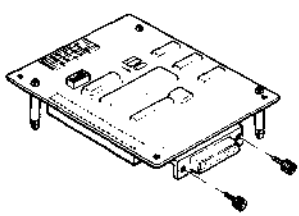

4. Using pliers, loosen and remove the hexagonal nut screws from the RS-232 board.

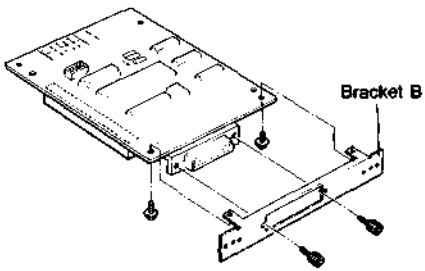

5. Attach Bracket B to the RS-232 board with the DB-25 jack extending through the cutout. From the bottom of the board, insert and tighten the 2 bracket screws (shorter ones) provided with the RS-232 Board package.

   Then secure the DB-25 jack to the Bracket B using the hexagonal nut screws you removed in Step 4.

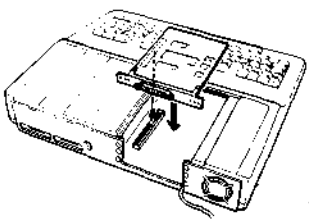

6. Carefully align and lower the RS-232 board pin socket on the pin header onto the computer's main logic board. Ledges on the computer will help secure the board once installed.

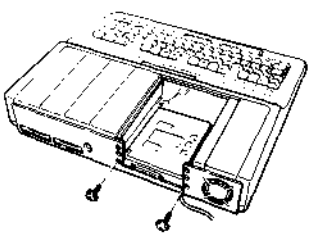

7. Secure Bracket B to the computer's rear panel. Align the hole on each end of the bracket with the hole on each side of the slot opening. Insert the longer screws supplied in the RS-232 board package, and tighten them.

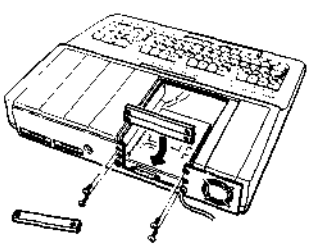

8. Snap off 1 segment of the rear panel's breakaway-type slot cover, and attach the remaining part of the cover to the rear panel. Align the cover holes with the 4 holes on the panel above the RS-232 board bracket, and insert the screws that you removed earlier.

Example 4. Connecting the RS-232 Board to a Memory Board in the Tandy 1000 EX

If you plan to install the Memory PLUS Expansion Adapter (25-1062) when you install your RS-232 board in the Tandy 1000 EX, or if the memory board is already installed, you must mount the RS-232 board on that board. The second bracket in your RS-232 board package (Bracket B) is specially designed for use with the Tandy 1000 EX.

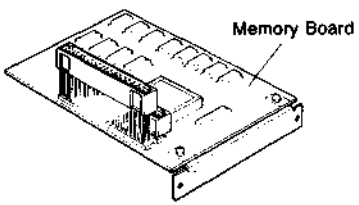

1. Turn off all equipment and disconnect any peripherals. If the memory board is already installed, wait at least 10 seconds before installing the RS-232 board. Be sure to touch a grounded metal object to discharge any static electricity.

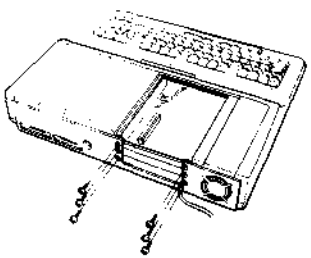

2. Remove the option slot cover as described in Steps 2 and 3 in the previous section.

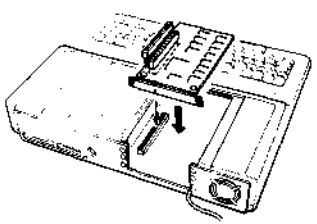

3. Carefully align and lower the memory board's pin socket onto the pin header on the computer's main logic board.

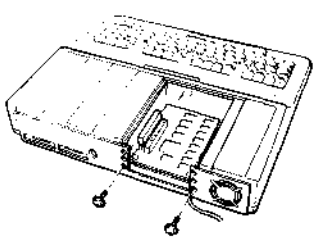

Secure the memory board's bracket to the computer's rear panel with the screws provided in the memory board's package.

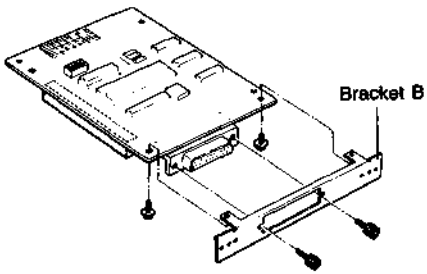

4. Remove the hexagonal screws, attach Bracket B to the RS-232 board, and secure the DB-25 jack to the bracket with the hexagonal screws.

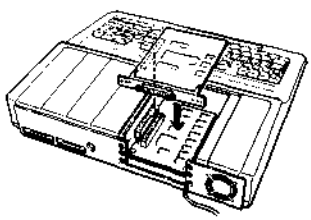

Carefully align and lower the RS-232 board pin socket onto the shorter of the 2 pin headers on the memory board.

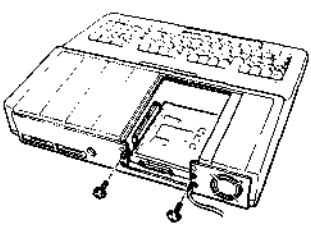

5. Secure Bracket B to the rear panel with the screws provided in the RS-232 board package.

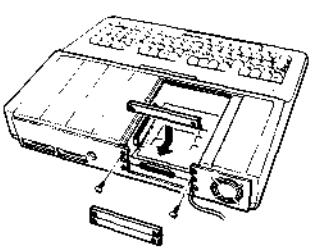

6. Snap off 1 segment of the rear panel's breakaway-type slot cover, and attach it to the panel with the screws that you removed earlier.

Note: When the board(s) are completely seated and parallel, check that all pins are fully inserted in the socket. Do not force the board. The shroud on the pin header is useful when you are aligning the pin connectors.

Programming Information

The 8250 is a programmable Asynchronous Communications Element (ACE), which is software-oriented and uses a 3-state, 8-bit bidirectional data bus. It is used to convert parallel data to a serial format on the transmit end, and convert serial data to parallel on the receiver end. The serial format, in order of transmission and reception, is a start bit, followed by 5 to 8 data bits, a parity bit (if programmed) and 1, 1-1/2 (5-bit format only) or 2 stop bits. The maximum recommended data rate is 9600 baud.

Internal registers enable you to program various types of interrupts, modem controls, and character formats. You can read the status of the ACE at any time monitoring word conditions, interrupts and modem status.

An additional feature of the ACE is a programmable baud rate generator that is capable of dividing an internal XTAL or TTL signal clock by a division of 1 to $2^{16}-1$.

The ACE is designed to work in either a polling or interrupt driven system which is programmable through a software-controlled internal register.

Operation Modes

You can select the operation mode by programming the 8250 Asynchronous Communications Element. First, select the I/O address (using the I/O address table), then write out data to the corresponding address.

Table 2. Input/Output Decodes

I/O Decode (in Hex)					
COM1	COM2	COM3	COM4	Register Selected	DLAB State
3F8	2F8	3E8	2E8	TX Buffer	DLAB = 0 (Write)
3F8	2F8	3E8	2E8	RX Buffer	DLAB = 0 (Read)
3F8	2F8	3E8	2E8	Divisor Latch LSB	DLAB = 1
3F9	2F9	3E9	2E9	Divisor Latch MSB	DLAB = 1
3F9	2F9	3E9	2E9	Interrupt Enable Register	DLAB = 0
3FA	2FA	3EA	2EA	Interrupt Identification Registers	
3FB	2FB	3EB	2EB	Line Control Register	
3FC	2FC	3EC	2EC	Modem Control Register	
3FD	2FD	3ED	2ED	Line Status Register	
3FE	2FE	3EE	2EE	Modem Status Register	

Address bits A0, A1 and A2 are used to select registers for read or write operation. The divisor latch access bit (DLAB) of the line control register also selects certain registers.

Table 3. Address Bits

Hex Addresses											
A9	**A8**	**A7**	**A6**	**A5**	**A4**	**A3**	**A2**	**A1**	**A0**	**DLAB**	**Register**
1	1/0	1	1	1	1/0	1	x	x	x		
							0	0	0	0	Receive Buffer (read)/ Transmit Buffer (write) Holding Register
							0	0	1	0	Interrupt Enable
							0	1	0	x	Interrupt Identification
							0	1	1	x	Line Control
							1	0	0	x	Modem Control
							1	0	1	x	Line Status
							1	1	0	x	Modem Status
							1	1	1	x	None
							0	0	0	1	Divisor Latch (LSB)
							0	0	1	1	Divisor Latch (MSB)

Note: Bits A4 and A8 will vary depending on the COM port (1-4) selected. Other bits over A3 are always 1.

You can access or control any of the 8250 registers through the system's microprocessor. These registers are used to control the operation of the 8250 and transmit and receive data. The accessible registers are shown in the table below.

Table 4. 8250 Accessible Registers

Register/Signal	Reset Control	Reset State
Interrupt Enable Register	Master Reset	All bits Low (0-3 Forced and 4-7 Permanent).
Interrupt Identification Register	Master Reset	Bit 0 is High, Bits 1 and 2 Low Bits 3-7 are Permanently Low
Line Control Register	Master Reset	All Bits Low
Modem Control Register	Master Reset	All Bits Low
Line Status Register	Master Reset	Except Bits 5 and 6 are High
Modem Status Register	Master Reset	Bits 0-3 Low Bits 4-7 Input Signal
SOUT	Master Reset	High
INTRPT (RCVR Errors)	Read LSR/MR	Low
INTRPT (RCVR Data Ready)	Read RBR/MR	Low
INTRPT (RCVR Data Ready)	Read IIR/ Write THR/MR	Low
INTRPT (Modem Status Changes)	Read MSR/MR	Low
OUT 2	Master Reset	High
RTS	Master Reset	High
DTR	Master Reset	High
OUT 1	Master Reset	High

Line Control Register

The format for asynchronous data communications exchange is specified through the line control register. The contents of the line control register are described in the figure below.

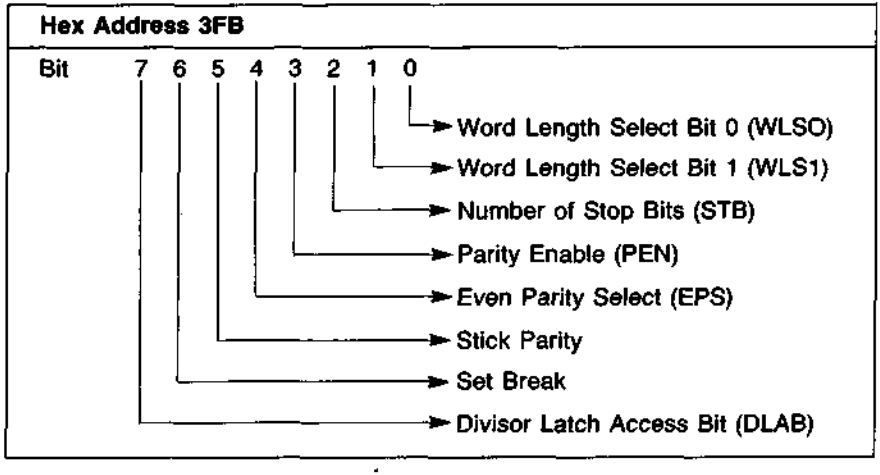

Figure 1. Line Control Register

Bits 0 and 1: These two bits specify the number of bits in each transmitted or received serial character. The encoding of bits 0 and 1 is as follows:

Bit 1	Bit 0	Word Length
0	0	5 Bits
0	1	6 Bits
1	0	7 Bits
1	1	8 Bits

Bit 2: This bit specifies the number of stop bits in each transmitted or received serial character. If bit 2 is a logic 0, 1 stop bit is generated or checked in the transmit or receive data, respectively. If bit 2 is a logic 1 when a 5-bit word length is selected via bits 0 and 1, 1-1/2 stop bits are generated or checked. If bit 2 is a logic 1 when either a 6-, 7-, or 8-bit word length is selected, 2 stop bits are generated or checked.

Bit 3: This bit is the Parity Enable bit. When bit 3 is a logic 1, a parity bit is generated (transmit data) or checked (receive data) between the last data word bit and stop bit of the serial data. (The parity bit is used to produce an even or odd number of 1s when the data word bits and the parity bit are summed.)

Bit 4: This bit is the Even Parity Select bit. When bit 3 is a logic 1 and bit 4 is a logic 0, an odd number of logic 1s is transmitted or checked in the data word bits and parity bit. When bit 3 is a logic 1 and bit 4 is a logic 1, an even number of bits is transmitted or checked.

Bit 5: This bit is the Stick Parity bit. When bit 3 is a logic 1 and bit 5 is a logic 1, the parity bit is transmitted and then detected by the receiver in the opposite state indicated by bit 4.

Bit 6: This bit is the Set Break Control bit. When bit 6 is a logic 1, the serial output (SOUT) is forced to the spacing (logic 0) state and remains there (until reset by a low-level bit 6) regardless of other transmitter activity. The feature enables the CPU to alert a terminal in a computer communications system.

Bit 7: This bit is the Divisor Latch Access Bit (DLAB). It must be set high (logic 1) to access the divisor latches of the baud-rate generator during a read or write operation. It must be set low (logic 0) to access the receiver buffer, the transmitter-holding register, or the interrupt enable register.

Programmable Baud-Rate Generator

The 8250 contains a programmable baud-rate generator that is capable of taking any clock input (1.8432 MHz) and dividing it by any divisor from 1 to $(2^{16} - 1)$. The output frequency of the baud generator is 16 x the baud rate.

Two 8-bit latches store the divisor in a 16-bit binary format. These divisor latches must be loaded during initialization in order to ensure the desired operation of the baud-rate generator. Upon loading either of the divisor latches, a 16-bit baud counter is immediately loaded. This prevents long counts on initial load.

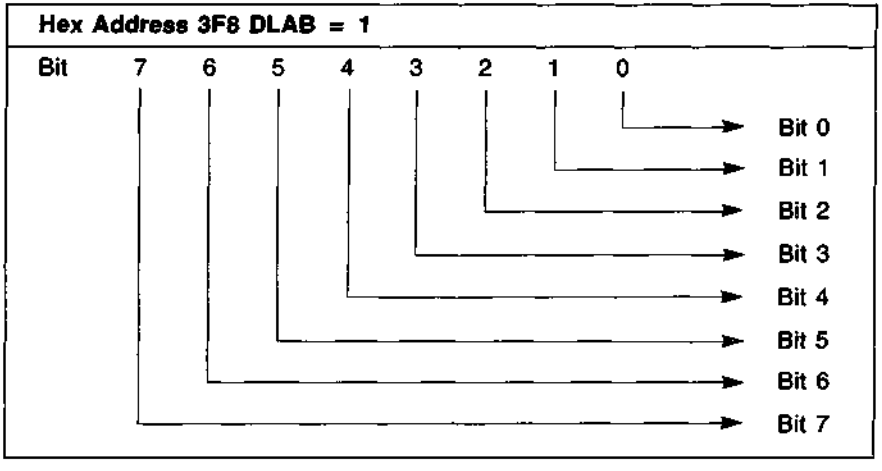

Figure 2. Divisor Latch Least Significant Bit (LSB)

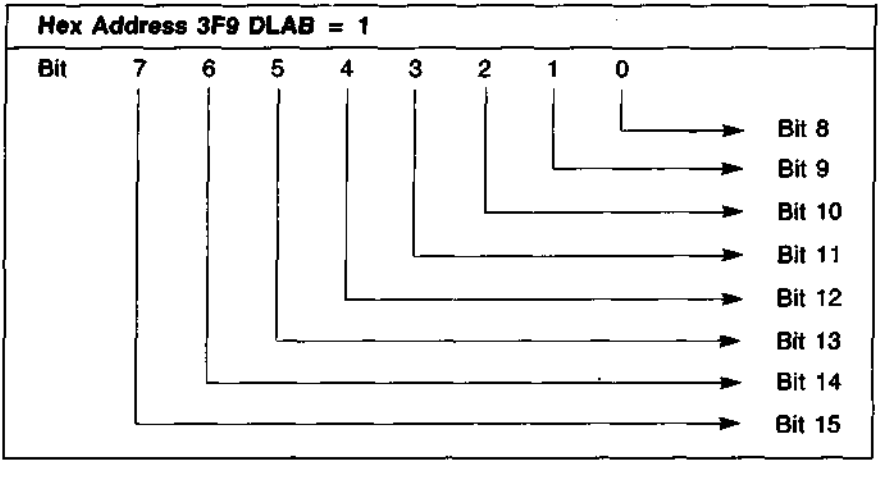

Figure 3. Divisor Latch Most Significant Bit (MSB)

Table 5 illustrates the use of the baud generator with a driving frequency of 1.8432 MHz.

Table 5. Baud Rates Using 1.8432 MHz Crystal

Desired Baud Rate	Divisor Used to Generate 16x Clock (Decimal)	(Hex)	Percent Error Difference Between Desired and Actual
50	2304	900	—
75	1536	600	—
110	1047	417	0.026
134.5	857	359	0.058
150	768	300	—
300	384	180	—
600	192	0C0	—
1200	96	060	—
1800	64	040	—
2000	58	03A	0.69
2400	48	030	—
3600	32	020	—
4800	24	018	—
7200	16	010	—
9600	12	00C	—

Line Status Register (LSR)

This 8-bit register provides status information to the CPU concerning data transfer. The contents of the line status register are described in the figure below.

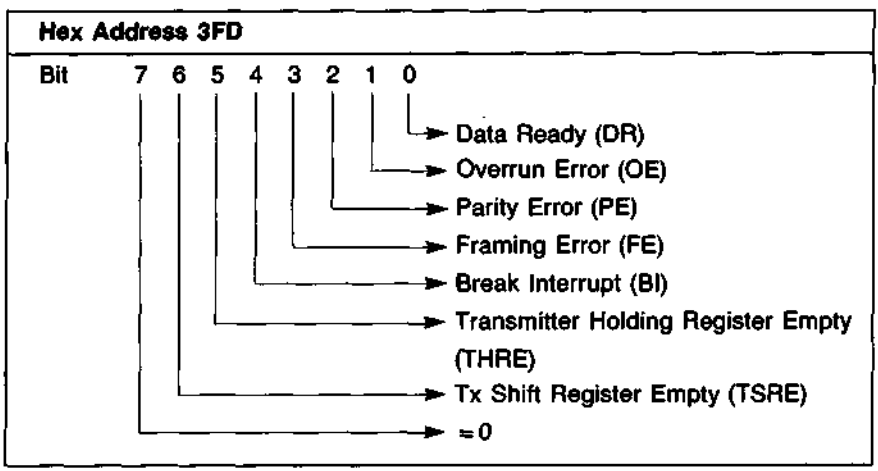

Figure 4. Line Status Register

Bit 0: This bit is the receiver Data Ready (DR) indicator. Bit 0 is set to a logic 1 whenever a complete incoming character has been received and transferred into the receiver buffer register. Bit 0 will be reset to a logic 0 either by the CPU reading the data in the receiver buffer register or by writing a logic 0 into it from the CPU.

Bit 1: This bit is the Overrun Error (OE) indicator. Bit 1 indicates that data in the receiver buffer register was not read by the CPU before the next character was transferred into the receiver buffer register, thereby destroying the previous character. The OE indicator is reset whenever the CPU reads the contents of the line status register.

Bit 2: This bit is the Parity Error (PE) indicator. Bit 2 indicates that the received data character does not have the correct even or odd parity, as selected by the even-parity-select bit. The PE bit is set to a logic 1 upon detection of a parity error and is reset to a logic 0 whenever the CPU reads the contents of the line status register.

Bit 3: This bit is the Framing Error (FE) indicator. Bit 3 indicates that the received character did not have a valid stop bit. Bit 3 is set to a logic 1 whenever the stop bit following the last data bit or parity bit is detected as a zero bit (Spacing level).

Bit 4: This bit is the Break Interrupt (BI) indicator. Bit 4 is set to a logic 1 whenever the received data input is held in the spacing (Logic 0) state for longer than a full word transmission time (that is, the total time of start bit + data bits + parity + stop bits).

Note: Bits 1 through 4 are the error conditions that produce a receiver-line-status interrupt whenever any of the corresponding conditions are detected.

Bit 5: This bit is the Transmitter-Holding-Register-Empty (THRE) indicator. Bit 5 indicates that the 8250 is ready to accept a new character for transmission. In addition, this bit causes the 8250 to issue an interrupt to the CPU when the transmit-holding-register-empty interrupt enable is set high. The THRE bit is set to a logic 1 when a character is transferred from the transmitter holding register into the transmitter shift register. The bit is reset to logic 0 concurrently with the loading of the transmitter holding register by the CPU.

Bit 6: This bit is the Transmitter-Shift-Register-Empty (TSRE) indicator. Bit 6 is set to a logic 1 whenever the transmitter shift register is idle. It is reset to logic 0 upon a data transfer from the transmitter holding register to the transmitter shift register. Bit 6 is a read-only bit.

Bit 7: This bit is permanently set to logic 0.

Interrupt Identification Register (IIR)

The 8250 has an on chip interrupt capability that allows for complete flexibility in interfacing to all popular microprocessors presently available. In order to provide minimum software overhead during data character transfers, the 8250 prioritizes interrupts into 4 levels. The 4 levels of interrupt conditions are: Receiver Line Status (priority 1), Received Data Ready (priority 2), Transmitter-Holding-Register-Empty (priority 3), and MODEM Status (priority 4).

Information indicating that a prioritized interrupt is pending and the source of that interrupt are stored in the interrupt identification register (refer Table 6, Interrupt Control Functions). The interrupt identification register (IIR), when addressed during chip-select time, freezes the highest priority interrupt pending and no other interrupts are acknowledged until the particular interrupt is serviced by the CPU. The contents of the IIR are described in the figure below.

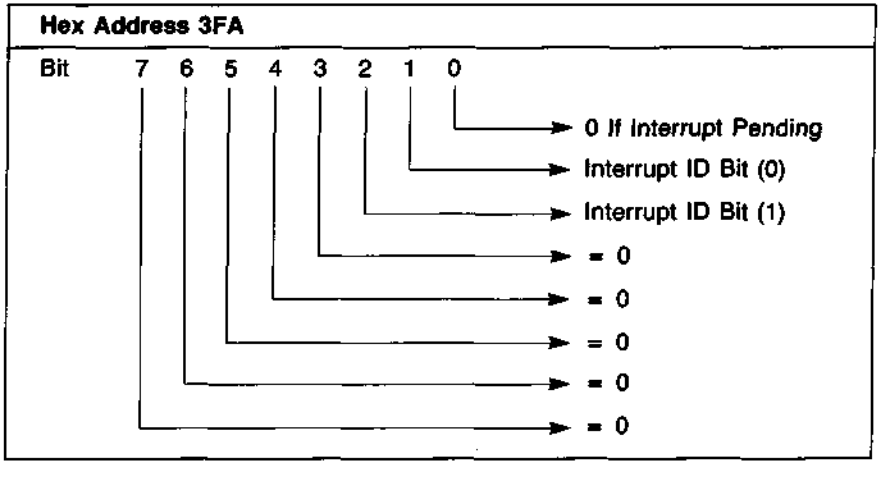

Figure 5. Interrupt Identification Register (IIR)

Bit 0: This bit can be used in either a hardwired prioritized or polled environment to indicate whether an interrupt is pending. When bit 0 is a logic 0, an interrupt is pending and the IIR contents may be used as a pointer to the appropriate interrupt service routine. When bit 0 is a logic 1, no interrupt is pending and polling (if used) continues.

Bits 1 and 2: These two bits of the IIR are used to identify the highest priority interrupt pending as indicated in Table 6.

Bits 3 through 7: These five bits of the IIR are always logic 0.

Table 6. Interrupt Control Functions

Interrupt Identification Register			Interrupt Set and Reset Functions			
Bit 2 0	Bit 1 0	Bit 0 1	Priority Level —	Interrupt Flag None	Interrupt Source None	Interrupt Reset Control —
1	1	0	Highest	Receiver Line Status	Overrun Error or Parity Error or Framing Error or Break Interrupt	Reading the Line Status Register
1	0	0	Second	Received Data Available	Receiver Data Available	Reading the Receiver Buffer Register
0	1	0	Third	Transmitter Holding Register Empty	Transmitter Holding Register Empty	Reading the IIR Register (if source of interrupt) or Writing into the Transmitter Holding Register
0	0	0	Fourth	MODEM Status	Clear to Send or Data Set Ready or Ring Indicator or Received Line Signal Detect	Reading the MODEM Status Register

Interrupt Enable Register (IER)

This 8-bit register enables the 4 interrupt sources of the 8250 to separately activate the chip interrupt (INTRPT) output signal. It is possible to totally disable the interrupt system by resetting bits 0 through 3 of the interrupt enable register. Similarly, by setting the appropriate bits of this register to a logic 1, selected interrupts can be enabled. Disabling the interrupt system inhibits the interrupt identification register and the active (high) INTRPT output from the chip. All other system functions operate in their normal manner, including the setting of the line status and MODEM status registers. The contents of the interrupt enable register are indicated below.

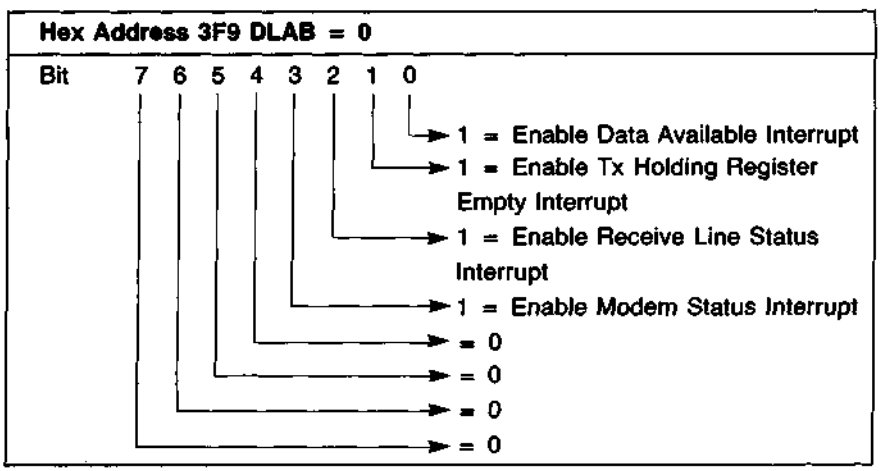

Figure 6. Interrupt Enable Register

Bit 0: This bit enables the received-data-available interrupt when set to logic 1.

Bit 1: This bit enables the transmitter-holding-register-empty interrupt when set to a logic 1.

Bit 2: This bit enables the receiver-line-status interrupt when set to logic 1.

Bit 3: This bit allows the adapter to send interrupts to the system. Bit 3 of the modem control register must be set high. Afterward any interrupt allowed by the IER will cause an interrupt.

Bits 4 through 7: These four bits are always logic 0.

MODEM Control Register (MCR)

This 8-bit register controls the interface with the MODEM or data set (or a peripheral device emulating a MODEM). The contents of the MODEM control register are described below.

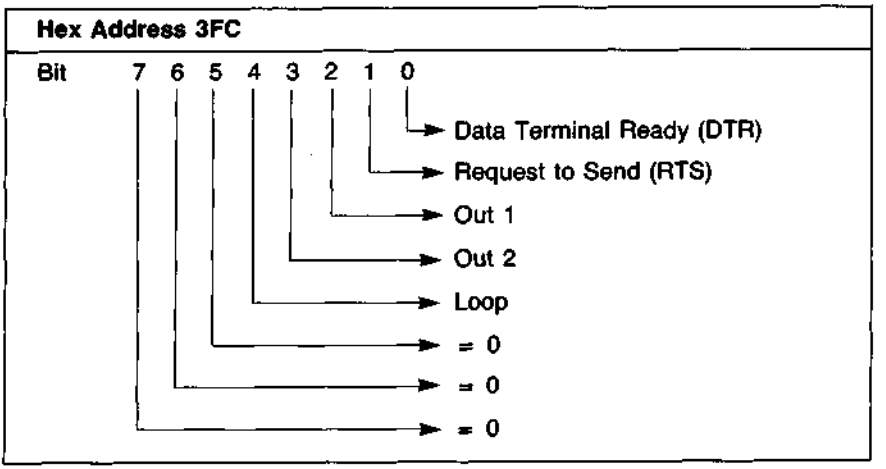

Figure 7. Modem Control Register

Bit 0: This bit controls the Data Terminal Ready ($\overline{DTR}$) output. When bit 0 is set to a logic 1, the $\overline{DTR}$ output is forced to a logic 0. When bit 0 is reset to a logic 0, the $\overline{DTR}$ output is forced to a logic 1.

Note: The $\overline{DTR}$ output of the 8250 may be applied to an EIA inverting line driver (such as the DS1488) to obtain the proper polarity input at the succeeding MODEM on data set.

Bit 1: This bit controls the Request to Send ($\overline{RTS}$) output. Bit 1 affects the $\overline{RTS}$ output in a manner identical to that described above for bit 0.

Bit 2: This bit controls the Output 1 ($\overline{OUT\ 1}$) signal, which is an auxiliary user-designated output. Bit 2 affects the $\overline{OUT\ 1}$ output in a manner identical to that described above for bit 0.

Bit 3: This bit controls the Output 2 ($\overline{OUT\ 2}$) signal, which is an auxiliary user-designated output. Bit 3 affects the $\overline{OUT\ 2}$ output in a manner identical to that described above for bit 0.

Bit 4: This bit provides a loopback feature for diagnostic testing of the 8250. When bit 4 is set to logic 1, the following occur: the transmitter serial output (SOUT) is set to a logic one (high) state; the receiver serial input (SIN) is disconnected; the output of the transmitter shift register is "looped back" into the receiver shift register input; the four MODEM control inputs ($\overline{CTS}$, $\overline{DSR}$, $\overline{RLSD}$, and $\overline{RI}$) are disconnected; and the four MODEM control outputs ($\overline{DTR}$, $\overline{RTS}$, $\overline{OUT\ 1}$, and $\overline{OUT\ 2}$) are internally connected to the four MODEM control inputs. In the diagnostic mode, data that is transmitted is immediately received. This feature allows the processor to verify the transmit- and receive-data paths of the 8250.

In the diagnostic mode, the receiver and transmitter interrupts are fully operational. The MODEM control interrupts are also operational but the interrupts sources are now the lower 4 bits of the MODEM control register instead of the 4 MODEM control inputs. The interrupts are still controlled by the interrupt enable register.

The 8250 interrupt system can be tested by writing into the lower 6 bits of the line status register and the lower 4 bits of the MODEM status register. Setting any of these bits to a logic 1 generates the appropriate interrupt (if enabled). The resetting of these interrupts is the same as in normal 8250 operation. To return to this operation, the registers must be reprogrammed for normal operation and then bit 4 must be reset to logic 0.

Bits 5 through 7: These bits are permanently set to logic 0.

MODEM Status Register (MSR)

This 8-bit register provides the current state of the control lines from the MODEM (or peripheral device) to the CPU. In addition to this current-state information, 4 bits of the MODEM status register provide change information. These bits are set to a logic 1 whenever a control input from the MODEM changes state. They are reset to logic 0 whenever the CPU reads the MODEM status register.

The contents of the MODEM status register are indicated below.

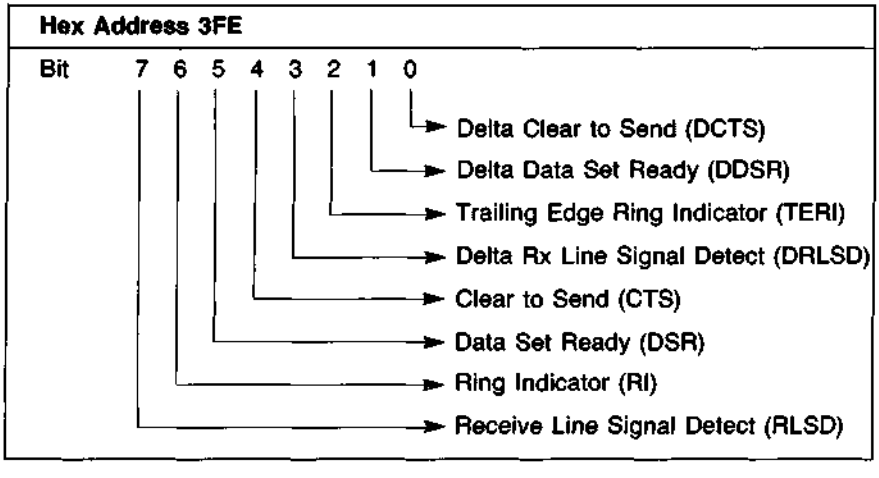

Figure 8. Modem Status Register

Bit 0: This bit is the Delta Clear to Send (DCTS) indicator. Bit 0 indicates that the $\overline{CTS}$ input to the chip has changed state since the last time it was read by the CPU.

Bit 1: This bit is the Delta Data Set Ready (DDSR) indicator. Bit 1 indicates that the $\overline{DSR}$ input to the chip has changed state since the last time it was read by the CPU.

Bit 2: This bit is the Trailing Edge of Ring Indicator (TERI) detector. Bit 2 indicates that the $\overline{RI}$ input to the chip has changed from an On (logic 1) to an Off (logic 0) condition.

Bit 3: This bit is the Delta Received Line Signal Detector (DRLSD) indicator. Bit 3 indicates that the $\overline{RLSD}$ input to the chip has changed state.

Note: Whenever bit 0, 1, 2 or 3 is set to logic 1, a MODEM status interrupt is generated.

Bit 4: This bit is the complement of the Clear to Send ($\overline{CTS}$) input.

Bit 5: This bit is the complement of the Data Set Ready ($\overline{DSR}$) input.

Bit 6: This bit is the complement of the Ring Indicator ($\overline{RI}$) input.

Bit 7: This bit is the complement of the Received-Line-Signal-Detect ($\overline{RLSD}$) input.

Receiver Buffer Register

The receiver buffer register contains the received character, which is defined in the following figure.

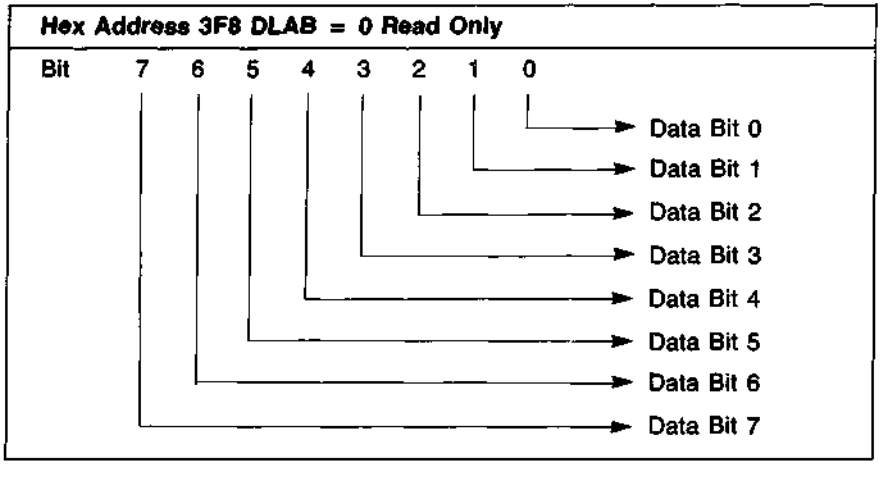

Figure 9. Receiver Buffer Register (RBR)

Bit 0 is the least-significant bit and is the first bit serially received.

Transmitter Holding Register

The transmitter holding register contains the character to be serially transmitted and is defined as follows:

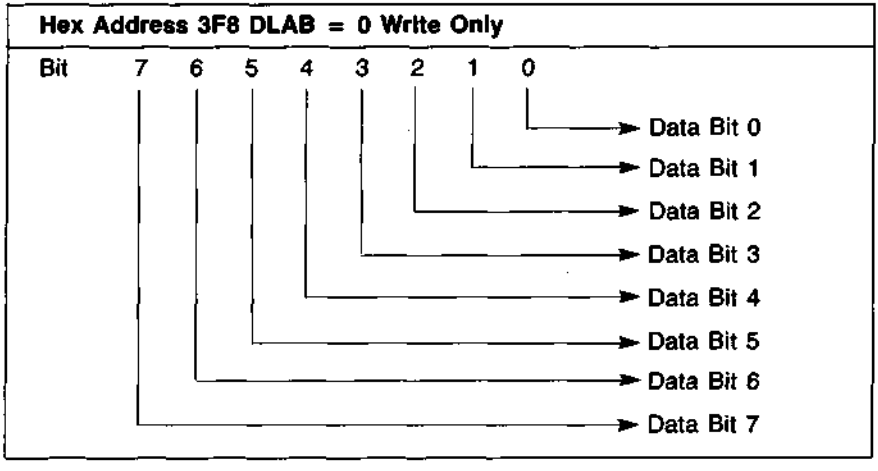

Figure 10. Transmitter Holding Register

Bit 0 is the least-significant bit and is the first bit serially transmitted.

Specifications

Data rate	Asynchronous format 50-9600 baud
Operation Mode	Binary, Serial, Asynchronous
Character Length	9 or 10 bits, including start/stop bits

RS-232C Terminal (DB-25)

Pin No.	Signal
2	Transmit Data (TD)
3	Received Data (RD)
4	Request To Send (RTS)
5	Clear To Send (CTS)
6	Data Set Ready (DSR)
7	Signal Ground
8	Carrier Detect (CD)
20	Data Terminal Ready (DTR)
22	Ring Indicator (RI)
23	Rate (Rate)

Description of Pin Socket

Pin No.	Signal	Pin No.	Signal
A1	Not Connected	B1	GND
A2	D7	B2	BRESET
A3	D6	B3	+5V
A4	D5	B4	IRQ2
A5	D4	B5/B6	Not Connected
A6	D3	B7	−12V
A7	D2	B8	Not Connected
A8	D1	B9	+12V
A9	D0	B10	GND
A10	Not Connected	B11/B12	Not Connected
A11	AEN	B13	IOW*
A12-A21	Not Connected	B14	IOR*
A22	A9	B15-B22	Not Connected
A23	A8	B23	IRQ5
A24	A7	B24	IRQ4
A25	A6	B25	IRQ3
A26	A5	B26-B28	Not Connected
A27	A4	B29	+5V
A28	A3	B30/B31	Not Connected
A29	A2		
A30	A1		
A31	A0		

Operating Temperature	55°F-85°F (12.8°C-29.4°C)
Humidity	
Operating environment	40 ~ 80% relative (non-condensing)
Storage	20 ~ 90% (non-condensing)
Dimensions (PC Board size)	5-1/2″ × 3-15/16″ (140 mm × 100 mm)
Weight	4.6 oz. (130 g.)

Schematic Diagram

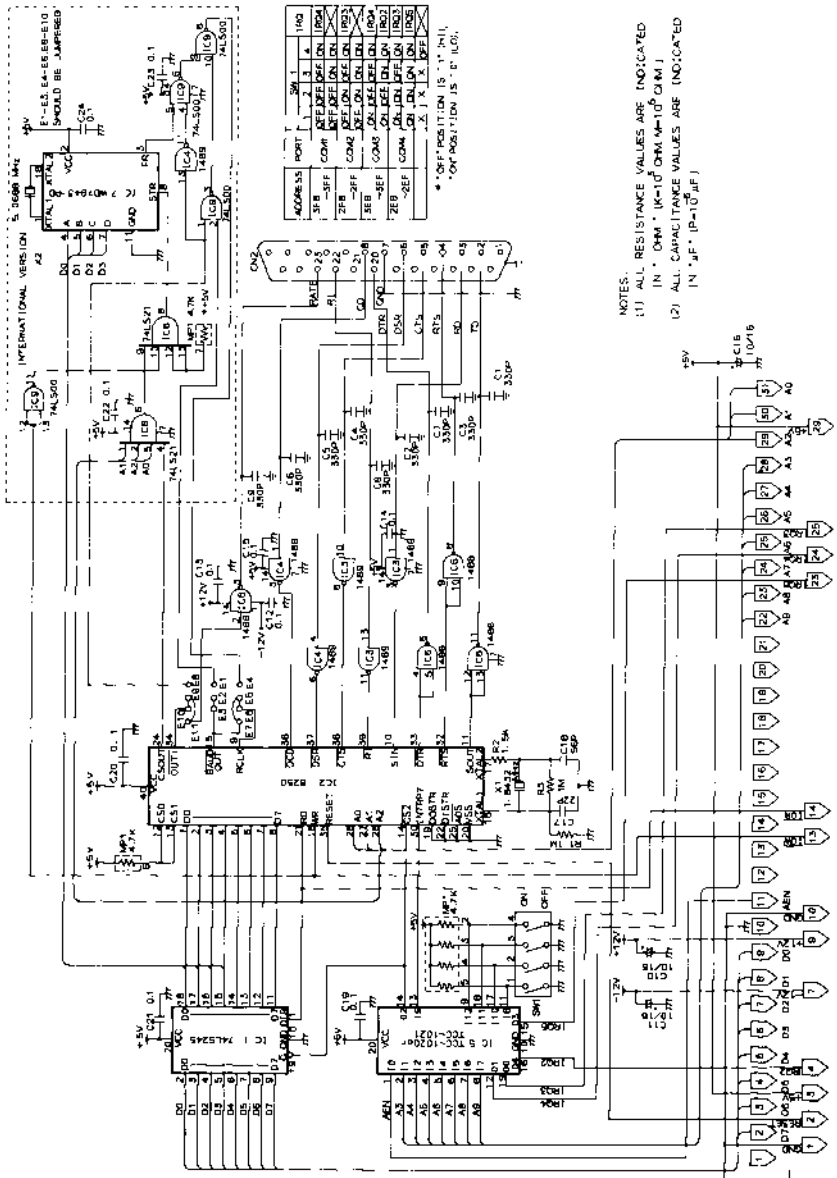

This schematic is subject to change without notice. For the most accurate schematic (and parts) contact Radio Shack, National Parts Dept., Fort Worth 76102.

SERVICE POLICY

Radio Shack's nationwide network of service facilities provides quick, convenient, and reliable repair services for all of its computer products, in most instances. Warranty service will be performed in accordance with Radio Shack's Limited Warranty. Non-warranty service will be provided at reasonable parts and labor costs.

6 86

RADIO SHACK
A Division of Tandy Corporation
Fort Worth, Texas 76102

Printed in Taiwan
811019320B

6A7