A Practical Guide to the TANDY® 1000 HX

TERMS AND CONDITIONS OF SALE AND LICENSE OF TANDY COMPUTER EQUIPMENT AND SOFTWARE PURCHASED FROM RADIO SHACK COMPANY-OWNED COMPUTER CENTERS, RETAIL STORES AND RADIO SHACK FRANCHISEES OR DEALERS AT THEIR AUTHORIZED LOCATIONS

USA LIMITED WARRANTY

I. CUSTOMER OBLIGATIONS

A. CUSTOMER assumes full responsibility that this computer hardware purchased (the "Equipment"), and any copies of software included with the Equipment or licensed separately (the "Software") meets the specifications, capacity, capabilities, versatility, and other requirements of CUSTOMER.

B. CUSTOMER assumes full responsibility for the condition and effectiveness of the operating environment in which the Equipment and Software are to function, and for its installation.

II. LIMITED WARRANTIES AND CONDITIONS OF SALE

A. For a period of ninety (90) calendar days from the date of the Radio Shack sales document received upon purchase of the Equipment. RADIO SHACK warrants to the original CUSTOMER that the Equipment and the medium upon which the Software is stored is free from manufacturing defects. **This warranty is only applicable to purchases of Tandy Equipment by the original customer from Radio Shack company-owned computer centers, retail stores, and Radio Shack franchisees and dealers at their authorized locations**. The warranty is void if the Equipment or Software has been subjected to improper or abnormal use. If a manufacturing defect is discovered during the stated warranty period, the defective Equipment must be returned to a Radio Shack Computer Center, a Radio Shack retail store, a participating Radio Shack franchisee or a participating Radio Shack dealer for repair, along with a copy of the sales document or lease agreement. The original CUSTOMER'S sole and exclusive remedy in the event of a defect is limited to the correction of the defect by repair, replacement, or refund of the purchase price, at RADIO SHACK'S election and sole expense. RADIO SHACK has no obligation to replace or repair expendable items.

B. RADIO SHACK makes no warranty as to the design, capability, capacity, or suitability for use of the Software, except as provided in this paragraph. Software is licensed on an "AS IS" basis, without warranty. The original CUSTOMER'S exclusive remedy, in the event of a Software manufacturing defect, is its repair or replacement within thirty (30) calendar days of the date of the Radio Shack sales document received upon license of the Software. The defective Software shall be returned to a Radio Shack Computer Center, a Radio Shack retail store, a participating Radio Shack franchisee or Radio Shack dealer along with the sales document.

C. Except as provided herein no employee, agent, franchisee, dealer or other person is authorized to give any warranties of any nature on behalf of RADIO SHACK.

D. **EXCEPT AS PROVIDED HEREIN, RADIO SHACK MAKES NO EXPRESS WARRANTIES, AND ANY IMPLIED WARRANTY OF MERCHANTABILITY OR FITNESS FOR A PARTICULAR PURPOSE IS LIMITED IN ITS DURATION TO THE DURATION OF THE WRITTEN LIMITED WARRANTIES SET FORTH HEREIN.**

E. Some states do not allow limitations on how long an implied warranty lasts, so the above limitation(s) may not apply to CUSTOMER.

III. LIMITATION OF LIABILITY

A. **EXCEPT AS PROVIDED HEREIN, RADIO SHACK SHALL HAVE NO LIABILITY OR RESPONSIBILITY TO CUSTOMER OR ANY OTHER PERSON OR ENTITY WITH RESPECT TO ANY LIABILITY, LOSS OR DAMAGE CAUSED OR ALLEGED TO BE CAUSED DIRECTLY OR INDIRECTLY BY "EQUIPMENT" OR "SOFTWARE" SOLD, LEASED, LICENSED OR FURNISHED BY RADIO SHACK, INCLUDING, BUT NOT LIMITED TO, ANY INTERRUPTION OF SERVICE, LOSS OF BUSINESS OR ANTICIPATORY PROFITS OR CONSEQUENTIAL DAMAGES RESULTING FROM THE USE OR OPERATION OF THE "EQUIPMENT" OR "SOFTWARE." IN NO EVENT SHALL RADIO SHACK BE LIABLE FOR LOSS OF PROFITS, OR ANY INDIRECT, SPECIAL, OR CONSEQUENTIAL DAMAGES ARISING OUT OF ANY BREACH OF THIS WARRANTY OR IN ANY MANNER ARISING OUT OF OR CONNECTED WITH THE SALE, LEASE, LICENSE, USE OR ANTICIPATED USE OF THE "EQUIPMENT" OR "SOFTWARE."**
NOTWITHSTANDING THE ABOVE LIMITATIONS AND WARRANTIES, RADIO SHACK'S LIABILITY HEREUNDER FOR DAMAGES INCURRED BY CUSTOMER OR OTHERS SHALL NOT EXCEED THE AMOUNT PAID BY CUSTOMER FOR THE PARTICULAR "EQUIPMENT" OR "SOFTWARE" INVOLVED.

B. RADIO SHACK shall not be liable for any damages caused by delay in delivering or furnishing Equipment and/or Software.

C. No action arising out of any claimed breach of this Warranty or transactions under this Warranty may be brought more than two (2) years after the cause of action has accrued or more than four (4) years after the date of the Radio Shack sales document for the Equipment or Software, whichever first occurs.

D. Some states do not allow the limitation or exclusion of incidental or consequential damages, so the above limitation(s) or exclusion(s) may not apply to CUSTOMER.

IV. SOFTWARE LICENSE

RADIO SHACK grants to CUSTOMER a non-exclusive, paid-up license to use the TANDY Software on **one** computer, subject to the following provisions:

A. Except as otherwise provided in this Software License, applicable copyright laws shall apply to the Software.

B. Title to the medium on which the Software is recorded (cassette and/or diskette) or stored (ROM) is transferred to CUSTOMER, but not title to the Software.

C. CUSTOMER may use Software on a multiuser or network system only if either, the Software is expressly labeled to be for use on a multiuser or network system, or one copy of this software is purchased for each node or terminal on which Software is to be used simultaneously.

D. CUSTOMER shall not use, make, manufacture, or reproduce copies of Software except for use on **one** computer and as is specifically provided in this Software License. Customer is expressly prohibited from disassembling the Software.

E. CUSTOMER is permitted to make additional copies of the Software **only** for backup or archival purposes or if additional copies are required in the operation of **one** computer with the Software, but only to the extent the Software allows a backup copy to be made. However, for TRSDOS Software, CUSTOMER is permitted to make a limited number of additional copies for CUSTOMER'S own use.

F. CUSTOMER may resell or distribute unmodified copies of the Software provided CUSTOMER has purchased one copy of the Software for each one sold or distributed. The provisions of this Software License shall also be applicable to third parties receiving copies of the Software from CUSTOMER.

G. All copyright notices shall be retained on all copies of the Software.

V. APPLICABILITY OF WARRANTY

A. The terms and conditions of this Warranty are applicable as between RADIO SHACK and CUSTOMER to either a sale of the Equipment and/or Software License to CUSTOMER or to a transaction whereby Radio Shack sells or conveys such Equipment to a third party for lease to CUSTOMER.

B. The limitations of liability and Warranty provisions herein shall inure to the benefit of RADIO SHACK, the author, owner and or licensor of the Software and any manufacturer of the Equipment sold by Radio Shack.

VI. STATE LAW RIGHTS

The warranties granted herein give the **original** CUSTOMER specific legal rights, and the **original** CUSTOMER may have other rights which vary from state to state.

4/87

SERVICE POLICY

Radio Shack's nationwide network of service facilities provides quick, convenient, and reliable repair services for all of its computer products, in most instances. Warranty service will be performed in accordance with Radio Shack's Limited Warranty. Non-warranty service will be provided at reasonable parts and labor costs.

6/86

The FCC Wants You to Know

This equipment generates and uses radio frequency energy. If not installed and used properly, that is in strict accordance with the manufacturer's instructions, it may cause interference to radio and television reception.

It has been type tested and found to comply with the limits for a Class B computing device in accordance with the specifications in Subpart J of Part 15 of FCC Rules, which are designed to provide reasonable protection against such interference in a residential installation. However, there is no guarantee that interference will not occur in a particular installation.

If this equipment does cause interference to radio or television reception, which can be determined by turning the equipment off and on, the user is encouraged to try to correct the interference by one or more of the following measures:

- Reorient the receiving antenna
- Relocate the computer with respect to the receiver
- Move the computer away from the receiver
- Plug the computer into a different outlet so that computer and receiver are on different branch circuits.

Warning

This equipment has been certified to comply with the limits for a Class B computing device, pursuant to Subpart J of Part 15 of FCC Rules. Only peripherals (computer input/output devices, terminals, printers, etc.) certified to comply with the Class B limits may be attached to this computer. Operation with non-certified peripherals is likely to result in interference to radio and TV reception.

5/86

A Practical Guide to the Tandy® 1000 HX

Tandy 1000 HX BIOS:
© 1984, 1985, 1986, 1987
Phoenix Software Associates, Ltd. and Tandy Corporation.
All Rights Reserved.

MS-DOS® Software:
© 1981, 1986 Microsoft Corporation.
Licensed to Tandy Corporation.
All Rights Reserved.

GW™-BASIC Software:
© 1983, 1984, 1985, 1986 Microsoft Corporation.
Licensed to Tandy Corporation.
All Rights Reserved.

All portions of this software are copyrighted and are the proprietary and trade secret information of Tandy Corporation and/or its licensor. Use, reproduction, or publication of any portion of this material without the prior written authorization of Tandy Corporation is strictly prohibited.

A Practical Guide to the Tandy 1000 HX:
© 1987 Tandy Corporation.
All Rights Reserved.

Reproduction or use of any portion of this manual, without express written permission from Tandy Corporation and/or its licensor, is prohibited. While reasonable efforts have been made in the preparation of this manual to assure its accuracy, Tandy Corporation assumes no liability resulting from any errors in or omissions from this manual, or from the use of the information contained herein.

Tandy, Radio Shack, and Personal DeskMate 2 are registered trademarks of Tandy Corporation.
Microsoft and MS-DOS are registered trademarks of Microsoft Corporation.
GW is a trademark of Microsoft Corporation.
IBM is a registered trademark of International Business Machines Corporation.
PC/XT is a trademark of International Business Machines Corporation.

10 9 8 7 6 5 4 3 2 1

About This Book

Your owner's manual, *A Practical Guide to the Tandy® 1000 HX,* is designed to get you "up and running" with your new computer as quickly as possible. The manual is divided into three parts:

PART I Your First Day with the Tandy 1000 HX

This section contains the instructions you need to set up your hardware and start up your computer. Once finished with this section, you are ready to run *Personal DeskMate® 2*, the application software that comes with your new computer.

PART II The HX Handbook

This section contains more information about your computer and options. You need not read all the information completely. We suggest that you read the chapters on the keyboard and menu. Otherwise, this information is available whenever you need to look something up. If you require more technical or detailed information on your hardware, consult the *Tandy 1000 HX Technical Reference* (Cat. No. 25-1513).

PART III The MS-DOS Handbook

This section contains information about diskettes and your operating system. Again, it is not necessary to read all this information. We recommend that you read the chapter on diskettes. If you require more information on MS-DOS®, consult the *MS-DOS Reference Manual* (Cat. No. 25-1508).

Contents

PART I Your First Day with the Tandy 1000 HX

Introduction A-1
Features A-1
Monitors A-2

1 **Setting Up Your Computer** A-3
The Computer and Monitor A-3
Connecting a Printer A-7
Connecting Joysticks A-8

2 **Starting Up Your Computer** A-9

3 ***Turning Off Your Computer*** A-13

PART II HX Handbook

4 **The Keyboard** B-1
Function Keys B-1
Typewriter Keys B-1
Numeric Keypad B-3

5 **The Diskette Drive** B-7

6 **The Volume Control and Earphone Jack** B-9

7 **The HX Menu** B-11

8 **Starting Application Programs from the HX Menu** B-13

9 **Options** B-15

10 **Installing Internal Options** B-17
Removing the Options Cover and Panel B-17
The Option Boards B-18
Installing One Option Board B-19
Installing Additional Option Boards B-22
Adding the Smartwatch B-23
Replacing the Options Panel and Cover B-25

11 **Adding an External Diskette Drive** B-27

12 Troubleshooting B-29
Video Problems B-29
Printer Problems B-29

13 Specifications B-31

PART III MS-DOS Handbook

14 Introducing MS-DOS C-1
Entering MS-DOS Instructions C-2
Starting the MS-DOS Diskette C-2
Changing the Current Drive C-3

15 About Diskettes C-5
Care and Handling of Diskettes C-5
Write Protection for 3½-Inch Diskettes C-6

16 Making Backups of Diskettes C-7
Using DISKCOPY with One Disk Drive C-8
Using DISKCOPY with Two Disk Drives C-9
Formatting with One Disk Drive C-10
Formatting with Two Disk Drives C-11
Copying an Entire Diskette C-11
Xcopying an Entire Diskette C-12

17 SETUP and the EEPROM C-13

INDEX I-1

PART I

Your First Day with the
Tandy 1000 HX

Introduction

Your Tandy 1000 Personal Computer HX is a powerful, versatile, yet simple-to-use computer. You can connect a monitor to your computer and immediately put it to work for you. With the Tandy 1000 HX, there is no need to purchase an operating system, additional adapters, BASIC, or even productivity software! Everything you need to begin is included with your computer.

Features

- IBM PC software compatibility.
- A dual-speed 7.16/4.77 megahertz, 16-bit Intel 8088 CPU chip. The dual-speed lets you choose the processing speed appropriate for your software application.
- 256 kilobytes (256K) of RAM memory, expandable to 640K. (One kilobyte equals 1,024 *bytes*, or characters, of information.)
- Enough MS-DOS built into ROM to rapidly start up your computer and run most application programs without using your MS-DOS diskette.
- A special EEPROM that stores system configuration information. You update this built-in information whenever you change the system configuration.
- A built-in standard 3½-inch diskette drive.
- Built-in support for a printer, a monochrome or color graphics monitor, and joysticks. You do not need extra adapter cards to use these features.
- A three-voice sound circuit and built-in speaker for sophisticated sound and music generation.
- A full-feature, 90-key keyboard, including a numeric keypad.
- MS-DOS Version 2.11 operating system and Version 2.02 BASIC language diskette.
- Personal DeskMate 2 application software.

Monitors

You can connect your Tandy 1000 HX to any of the following monitors:

- A VM-4 Monochrome Monitor (Cat. No. 25-1020)
- A CM-5 RGBI Color Monitor (Cat. No. 25-1023/1043)
- A CM-11 RGBI Color Monitor (Cat. No. 25-1024)

Setting Up Your Computer

Setting up your computer is easy. First, you connect it to a monitor or TV. Next, you connect any additional equipment, such as a printer or joysticks. Then, you plug it into an electrical outlet, and that's it!

The Computer and Monitor

Follow the steps below to set up your computer:

1. Set the computer on a flat surface, with the back of the unit facing you. Press the button on the front of the diskette drive to eject the plastic shipping insert. Remove the insert.

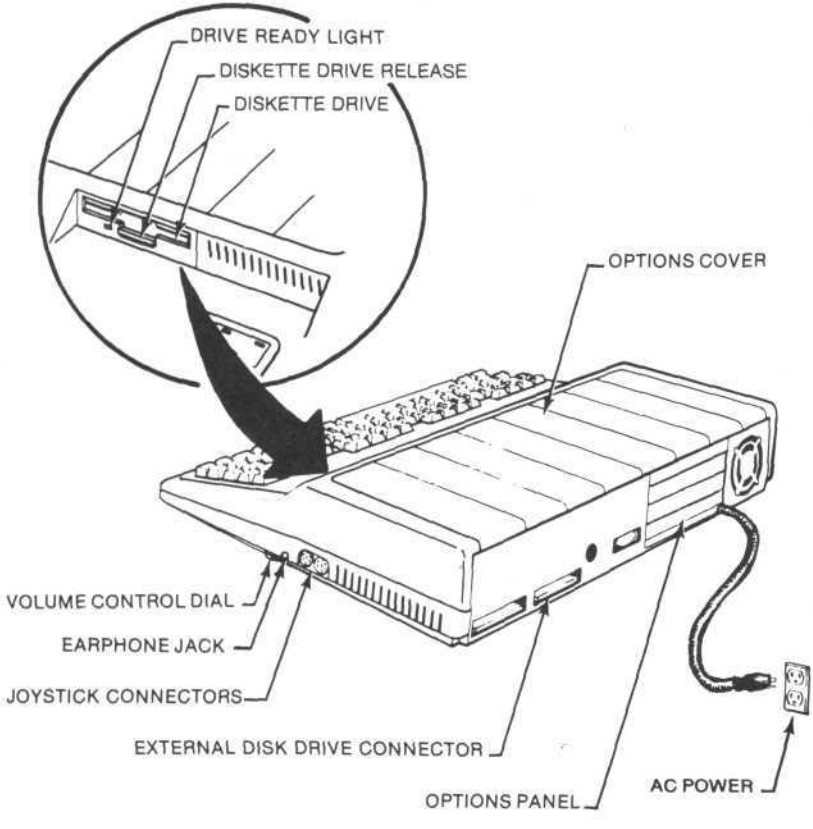

Note: If you are going to add internal options at this time, refer to the "Internal Options" section in the "HX Handbook" part of this manual.

2a. **RGBI Color Monitor Users:** Connect the monitor's computer cable to the Monitor connector on the back of your computer. Connect the monitor's power cord to an AC power source.

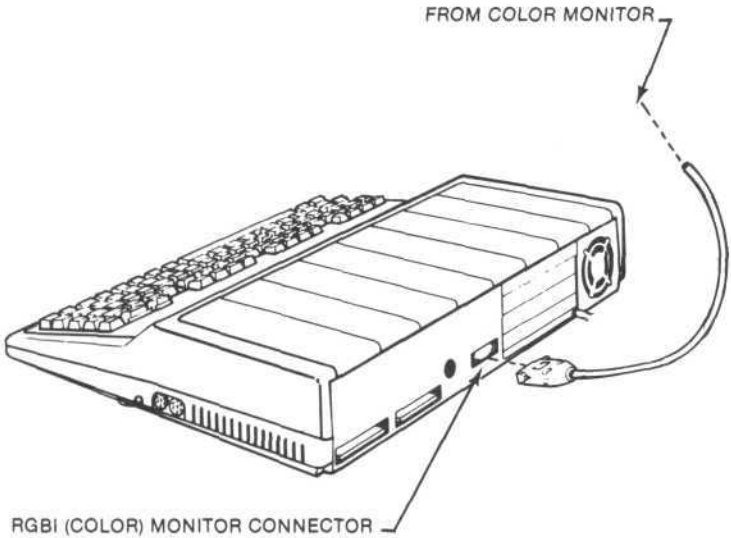

2b. **Monochrome Monitor Users:** Connect the monitor's computer cable to the Video connector on the back of your computer. Connect the monitor's power cord to an AC power source.

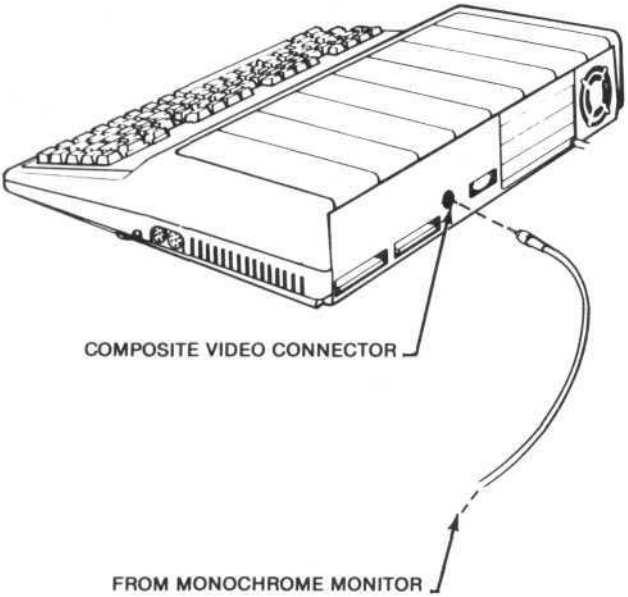

3. Plug your computer's main power cord into a grounded 110 VAC 3-prong outlet. (Voltage requirements vary by country. Refer to the label on your computer.)

   Note: Electrical interference and power surges can destroy data. Do not plug your computer into an outlet that also powers heavy equipment (copiers, office machines, and so forth). Also, if you must use an extension, use a grounded power line filter, such as Cat. No. 26-1244.

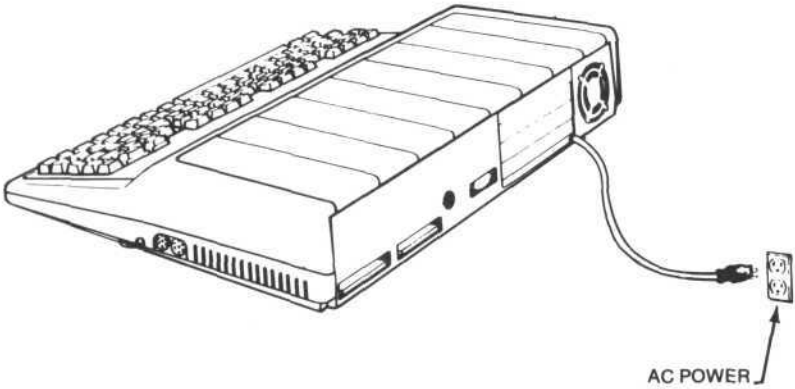

You are now, for the most part, set up. If you are going to connect a printer or joysticks, read the following sections. If not, skip right to Chapter 2, "Starting Up Your Computer."

Connecting a Printer

1. Connect the plug end of the printer cable to the printer as described in the printer documentation.
2. Connect the cable's shielded card edge connector to the Parallel Printer connector on the back of your computer.

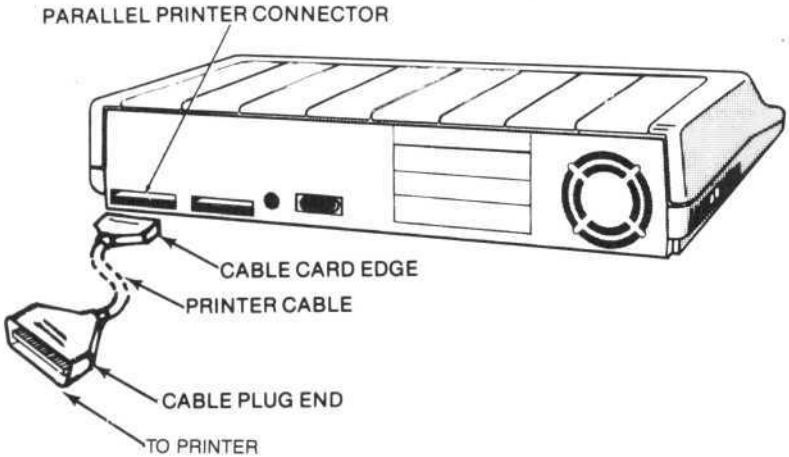

3. Connect the printer's power cord to an AC power source.

   Refer to your printer documentation for specific information on setting up and using your printer.

Connecting Joysticks

The Tandy 1000 HX provides support for games and other joystick applications programs. The two joystick connectors are on the right side of the computer. Connect a joystick or other device to the left and/or right joystick connection.

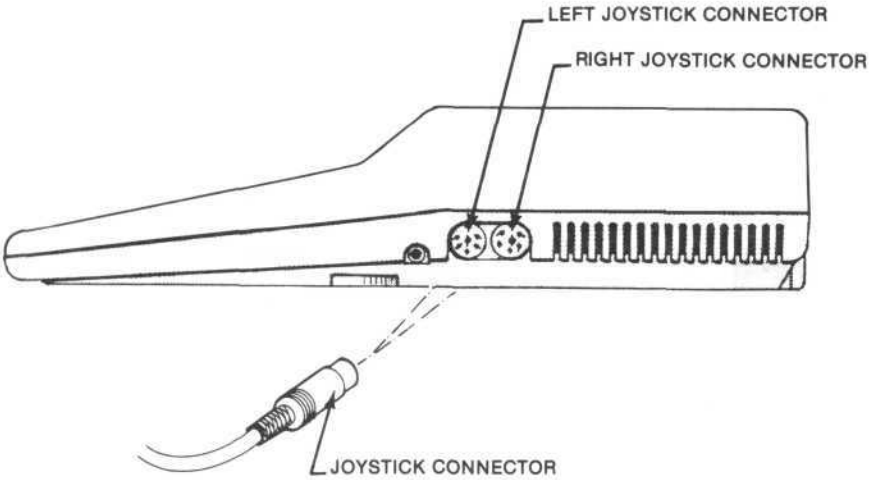

Note: The Right and Left indications on the joystick connectors are for reference only. Some application programs use these connectors interchangeably. If you use joystick software and the program does not appear to function correctly, try reversing the joysticks.

Starting Up Your Computer

Turn your computer on and off with the power switch on the left side of the unit.

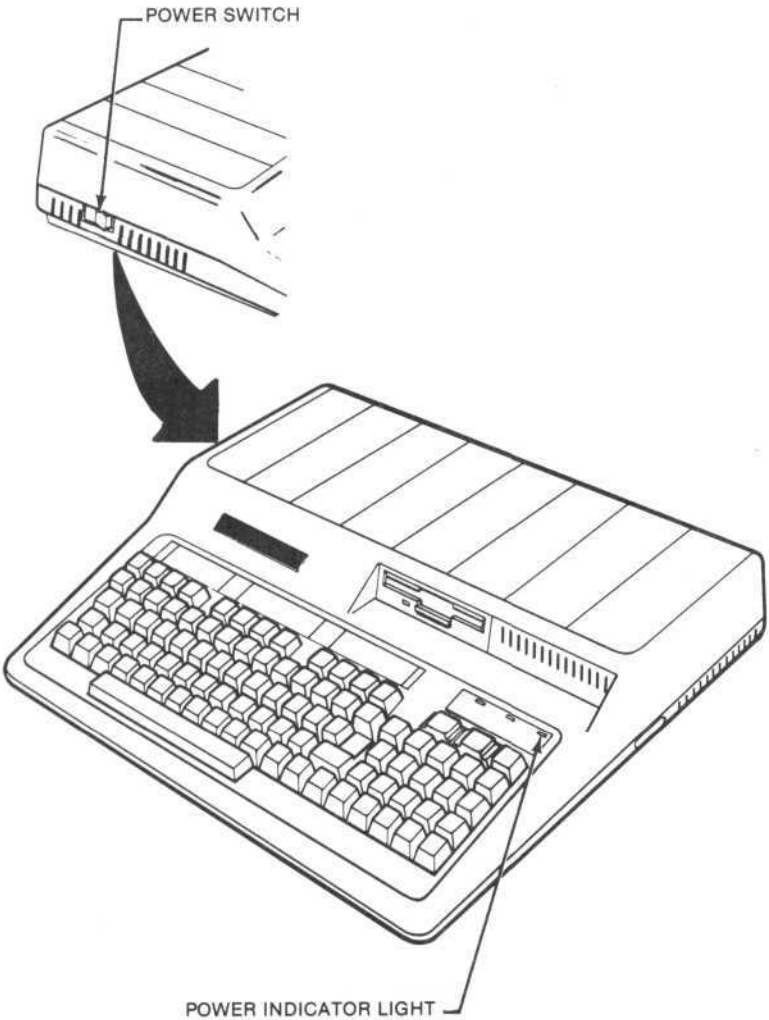

1. Turn on the computer. The screen displays copyright information and the following menu:

```
                    Tandy 1000 HX
Options                          Programs on Drive A:
F1 Run Personal DeskMate
F2 Set System Date and Time
F3 View Programs on Drive A:
F4 Startup from Internal Drive
ARROW keys Move Marker     ENTER Executes     ESC exits to MS-DOS
```

This is the main menu built into your computer. To make a selection, either press the appropriate *function key*, or press the arrow keys until your choice is highlighted, and press [ENTER]. The various choices are explained fully in the "HX Handbook" part of this manual.

> **Note:** The options portion of the menu varies, depending on the number of drives you have installed.

You are now ready to start up Personal DeskMate 2.

2. Remove the Personal DeskMate 2 diskette that came with your computer from its plastic sleeve. Gently slide the diskette, label side up, into the drive until it clicks into place. See the following illustration:

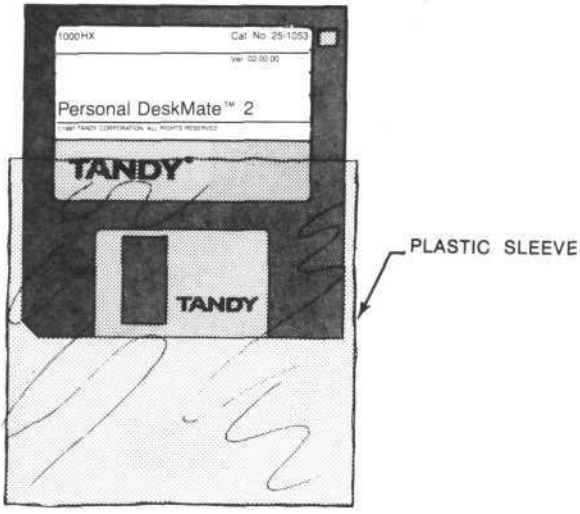

3. To run Personal DeskMate 2, press [F1]. The initial display for Personal DeskMate now appears on the screen.

Congratulations! You are now up and running. You can now go directly to your *Personal DeskMate 2* manual and begin using Personal DeskMate. (Be sure to take the "15-Minute Tour.")

We recommend that once you finish your first Personal DeskMate session, you take time and become acquainted with the remainder of this manual. Your "HX Handbook" part contains general information about your computer, the keyboard, and options you can add. The "MS-DOS Handbook" part contains information about diskettes, instructions on making *backups*, and information about your MS-DOS operating system.

Turning Off Your Computer

To turn off your computer, follow these steps.

1. Exit any application program and return to the HX Menu.
2. If you have a diskette in the drive, be sure the drive activity light is off. Then, turn off your monitor and any peripherals (such as a printer).
3. Press the power switch on your computer to the off position.

PART II

HX Handbook

The Keyboard

Your computer's keyboard consists of three sections: the function keys, the typewriter keys, and the numeric keypad. Lay the plastic write-on inserts in the slots above the function keys.

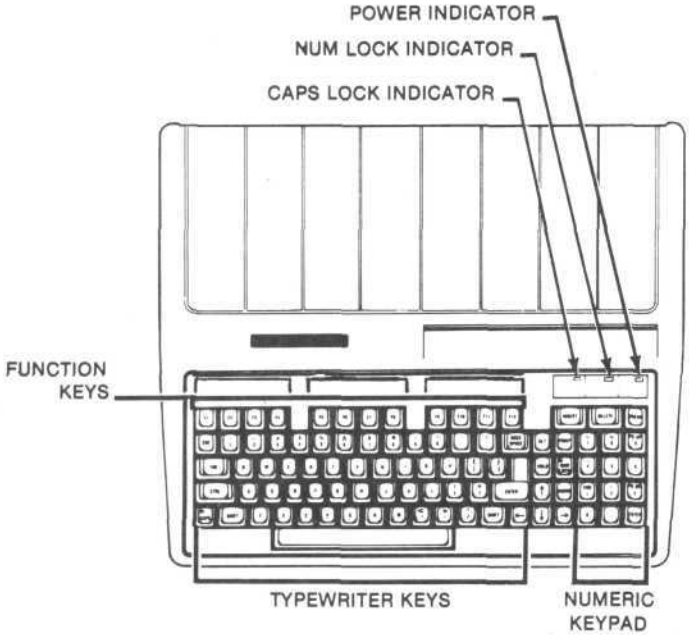

Function Keys

The function keys, [F1]-[F12], at the top of the keyboard, are program-specific. Their functions depend on the program you are running.

Typewriter Keys

The left side of the keyboard, below the function keys, is similar to the keyboard of a standard typewriter. However, when you hold down a character or number key, the keystroke repeats automatically until you release the key. This section of the keyboard also contains some keys not found on a standard typewriter.

The function of [ESC] (Escape) depends on the program you are running. It is often used either singly or in combination with other keys to perform various program functions.

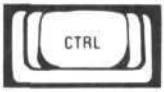

Use [CTRL] (Control) in combination with certain other keys to perform specific operations. The combinations available and their functions are program-dependent. To use a Control key combination, hold down [CTRL], and press the other key. (For example, pressing [CTRL] [C] performs a "Break" or program interrupt in many programs.)

> **Note:** Some software manuals refer to [CTRL] as CNTRL.

When you press [CAPS] (the Caps Lock key), the alphabet keys produce only capital letters. ([CAPS] does not affect any keys other than A-Z.) The CAPS LOCK light at the top right of the keyboard indicates that the keyboard is in caps-only mode. Press the key once to activate caps-only mode; press the key again to return to normal keyboard mode.

[ENTER] enters commands and data into the computer. After you press [ENTER], the command or information you typed is processed by the program or operating system you are running.

> **Note:** Some software manuals refer to [ENTER] as RETURN OR [↵].

Use [ALT] (the Alternate key) in combination with certain other keys to perform specific operations. The combinations available and their functions depend on the program you are running. To use an Alternate key combination, hold down [ALT], and press the other key. (For example, pressing [CTRL] [ALT] [DELETE] resets the computer.)

The function of [HOLD] depends on the program you are running. In some programs, pressing [HOLD] pauses program execution.

Pressing one of the arrow keys moves the blinking cursor, a position marker, in the direction of the arrow.

When you hold down [SHIFT] and press [PRINT], many programs print the display currently on the screen.

[NUM LOCK] (the Number Lock key) reverses the function of the keys on the numeric keypad on the right side of the keyboard. The NUM LOCK light at the top right of the keyboard indicates that number lock is on.

When number lock is on, the unshifted keys produce the numbers 0-9, a decimal, a plus (+), and a minus (-). When number lock is off, the unshifted keys have the functions described in the "Numeric Keypad" section, which follows.

The function of [HOME] depends on the program you are running. In some programs, pressing [HOME] moves the cursor to the upper left corner of the screen.

Numeric Keypad

The numeric keypad on the right side of the keyboard is arranged the same way as a calculator keypad. Number keys are normally the shifted characters on the numeric keypad. (Hold down [SHIFT] and press a number.) Press [NUM LOCK] to use the keypad for extensive number entry. When number lock is on, you can type numbers without pressing [SHIFT].

The shifted (number lock on) values of the keys on the numeric keypad are 0-9, decimal (.), plus (+), and minus (-). The [BREAK] key and a duplicate of the [ENTER] key are also on the numeric keypad.

The unshifted functions of these keys are as follows:

The function of [INSERT] depends on the program you are running. In some programs, pressing [INSERT] changes the typing mode from the normal overstrike (type-over) mode to the insertion mode so that you can insert data into a line of text. Pressing the key again returns the keyboard to the overstrike mode.

The function of [DELETE] depends on the program you are running. In some programs, pressing [DELETE] erases the character at the current cursor position.

The function of [BREAK] depends on the program you are running. In some programs, pressing [BREAK] halts program execution.

Pressing this key displays a backward slash (\).

Pressing this key displays a "difference" symbol, similar to a tilde (~).

The function of [PG UP] (the Page Up key) depends on the program you are running.

Pressing this key displays a broken vertical line (¦). In MS-DOS, pressing this key lets you use the output of one command as input for another.

The function of [END] depends on the program you are running. In some programs, pressing [END] moves the cursor to the right of the last character in the current line.

Pressing this key displays a grave accent mark (`).

The function of [PG DN] (the Page Down key) depends on the program you are running.

[ENTER] on the numeric keypad is a duplicate of the main [ENTER] key.

The Diskette Drive

Use the diskette drive to store programs and data on diskettes. To insert a diskette into an empty drive, gently slide it, label side up, into the drive until the diskette clicks into place.

The drive activity light is on whenever the diskette drive is reading from or writing to a diskette. **Never remove a diskette or turn off the computer when this light is on; doing so might destroy data on your diskette.**

To remove a diskette from the drive, be sure the drive activity light is off. Then, press the button on the front of the drive. When the diskette is partially ejected, pull out the diskette.

The built-in diskette drive is the *primary drive*, usually referred to as Drive A. An optional diskette drive is the *secondary drive*, usually referred to as Drive B. The operating system and most applications normally operate from the primary drive. A secondary drive is normally used for a data or utilities diskette.

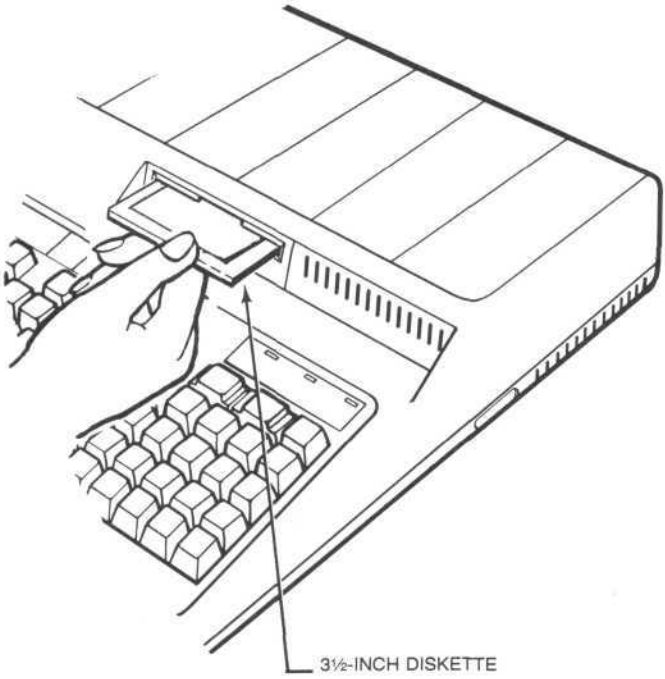

The Volume Control and Earphone Jack

The Tandy 1000 HX features a three-voice sound circuit and a built-in speaker for sound and music generation. A Volume Control knob on the right side of the computer controls the volume of the sound. You can also route the sound to the Earphone Jack by plugging an earphone or mini-headphones into the jack.

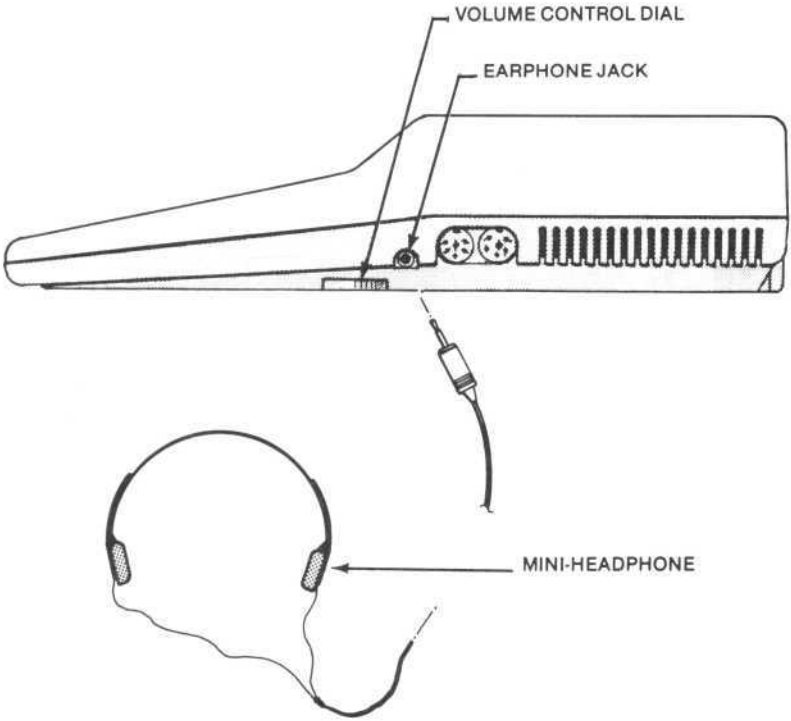

The HX Menu

When you first start up (*boot*) your computer, the following menu appears:

```
                    Tandy 1000 HX
Options                          Programs on Drive A:
F1 Run Personal DeskMate
F2 Set System Date and Time
F3 View Programs on Drive A:
F4 Startup from Internal Drive

ARROW keys Move Marker     ENTER Executes     ESC exits to MS-DOS
```

[F1] With your Personal DeskMate diskette in Drive A (the *primary*, built-in diskette drive), press [F1] to automatically start up Personal DeskMate.

[F2] Press [F2] to tell the computer that you want to change the date and time. Then, enter the date and time using the format displayed on the screen.

[F3] Press [F3] to see a list of programs on a diskette that you have in Drive A. The list appears on the right half of the menu.

[F4] Press [F4] to re-boot from a diskette in the internal drive. This diskette must be a *bootable* diskette, such as MS-DOS.

[→] Press the arrow keys to highlight a selection.

[ENTER] Press [ENTER] to execute the highlighted selection. For example, you can highlight one of the options or a program listed on the right portion of the menu, and then press [ENTER] to run that option or program.

[ESC] With your MS-DOS diskette in Drive A, press [ESC] to exit the HX Menu and access MS-DOS.

Notes:

- Any time you are at the system prompt (usually A>), you can press [F12] and return to the HX Menu.
- To select a program without executing it, press the space bar instead of [ENTER]. This is useful when you select a program that requires parameters.
- If you want to enter an MS-DOS command, you can simply begin typing that command. The system prompt is displayed as soon as you begin typing.
- Whenever you insert a new diskette, you must "View" it ([F3] on the menu) before the programs it contains appear on the menu.
- If you add an additional internal diskette drive, your menu will display an additional option for viewing programs on Drive B.
- If you add an external drive, the menu will display options for viewing programs on and starting up from Drive C.

Starting Application Programs from the HX Menu

Application programs are designed to perform specific tasks—word processing, spreadsheet analysis, and so forth. The Personal DeskMate diskette, for example, contains several application programs.

Many application programs (including Personal DeskMate) must be started with MS-DOS. Your Tandy 1000 HX has enough MS-DOS built in to run most of these applications directly from your HX Main Menu. Follow these steps:

1. If your computer is off, turn it on.
2. Insert the application diskette into a drive.
3. From the HX Menu, choose the option to view the drive in which you have the application diskette. The programs on that diskette appear in the right half of the menu.
4. Use the arrow keys to highlight the program you want to run, and press [ENTER].

Some applications let you start up directly from the application diskette. These applications are on *bootable* diskettes. You can start up these applications from the HX Menu, too. Follow these steps:

1. If your computer is off, turn it on.
2. Insert the application diskette into a drive.
3. At the HX Menu, press [F4]. Your computer restarts from the bootable application diskette.

When you are using an application program, the program's prompts and screens appear instead of the HX Menu or operating system prompt.

Always consult the documentation that came with your application program for instructions on its use.

If your application program documentation states that you must adjust CONFIG.SYS or AUTOEXEC.BAT, or if the program requires an ANSI.SYS file, refer to the *MS-DOS Reference Manual* (Cat. No. 25-1508). You will then need to run the Setuphx program and change the appropriate data. See "Setup for the Tandy HX" in the "MS-DOS Handbook" part of this manual.

Chapter 9

Options

You can expand your computer in many ways. Here is a list of a few of the options available for your Tandy 1000 HX.

- A parallel printer. To connect your printer, you also need a shielded, 34-pin card edge to 36-pin plug parallel printer cable (Cat. No. 26-225 or 26-222).
- Joysticks (Cat. No. 26-3012B).
- A second internal, 3½-inch diskette drive (Cat. No. 25-1065).
- One 5¼-inch or 3½-inch external diskette drive (Cat. No. 25-1060 or 25-1061).
- A Tandy Serial Mouse (Cat. No. 25-1040) to use with software that supports mouse operations. You must install a Tandy PLUS RS-232C Upgrade Board (Cat. No. 25-1031) to connect a serial mouse to your computer.
- A Memory PLUS Expansion Adapter (Cat. No. 25-1062) you can install on your main logic board to expand your computer to as much as 640K memory. This board alone increases your computer's memory by 128K (384K total memory). The memory board also features connectors that let you add two additional PLUS option boards to your computer.
- A 256K Parity Memory Kit (Cat. No. 25-3062) you add to the Memory PLUS Expansion Adapter to increase memory to 640K.
- A Smartwatch chip (Cat. No. 25-1033) can be installed on the main logic board. This clock/calendar chip, with battery backup, automatically keeps track of the time and date whether the unit is on or off. (Installation by Radio Shack is required.)
- The Tandy PLUS RS-232C Upgrade Board (Cat. No. 25-1031) to connect an external modem for communications or to connect a serial device, such as a serial mouse or a serial plotter/printer.

- A Tandy internal modem board, including the PLUS 300-Baud PC Modem (Cat. No. 25-1017) or the PLUS 1200-Baud PC Modem (Cat. No. 25-1018), for communications.

  Note: To take full advantage of the telecommunications features in DeskMate, you must install either the RS-232C card/external modem combination or one of the internal modems.

- The PLUS Network 4 Interface (Cat. No. 25-1019) to set up an educational network.

Installing Internal Options

You must remove the options cover and panel before you install any of the internal option boards.

Before installing or removing an option board in your computer, turn off the computer, and disconnect the power cord from the wall outlet. Installing or removing a board with power on can cause damage to the option board as well as to the main logic board.

Removing the Options Cover and Panel

Turn the back of the computer toward you. Remove the options cover first, by pressing down on the side of the cover nearest the front of the computer. At the same time, pull the cover toward you. Gently lift the cover up and out as it clears the tracks.

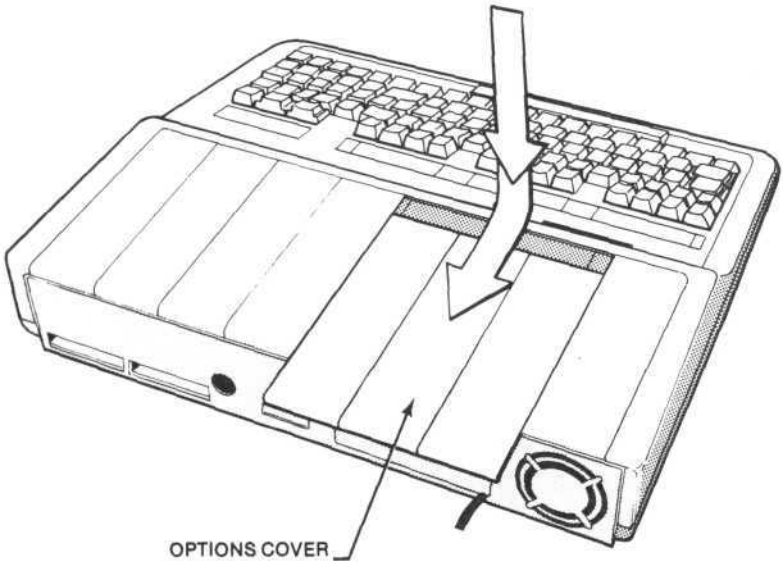

After you remove the options cover, remove the panel. You can now see the main logic board shield.

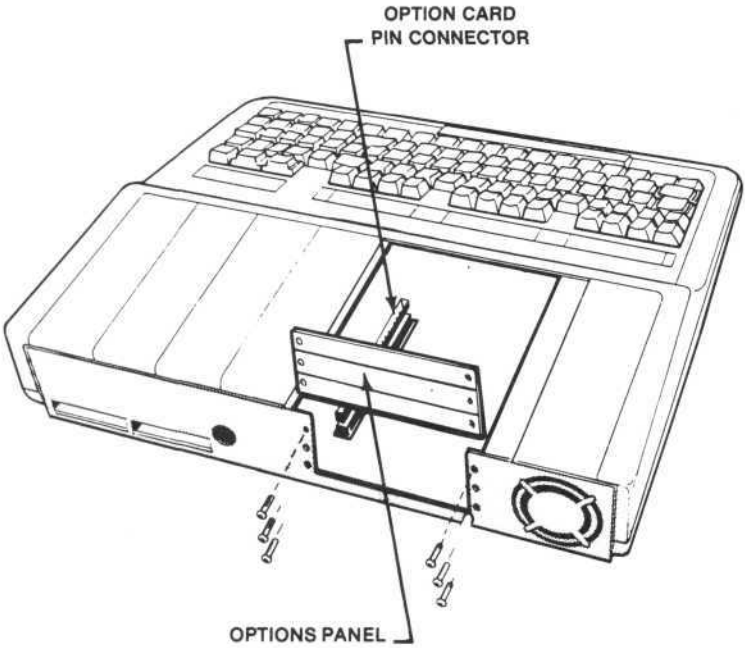

The Option Boards

You can install one option board on the connector pins on your computer's main logic board. Two additional boards can be added if you install the Memory PLUS Expansion Adapter on the main logic board. (You add the additional boards to the memory board.)

> **Note:** If you are adding the 256K upgrade to the memory board, you must add the chips before you install the board. Refer to the instructions that come with the memory board. Also note that the chip kit contains nine memory chips. You install only eight of these on the memory board. Store the other chip in a safe place.

Installing One Option Board

Before you install an option board, you must attach the board's metal connector bracket to it so that the cutout fits over the cable connector. The bracket is already attached to the Memory PLUS Expansion Adapter. All other PLUS-type option boards are packaged with two connector brackets. For your computer, position the flat bracket (B) over the mounting holes on the option board. Use the two screws packaged with the board to secure the bracket to the board. (Insert the screws from the bottom of the board.)

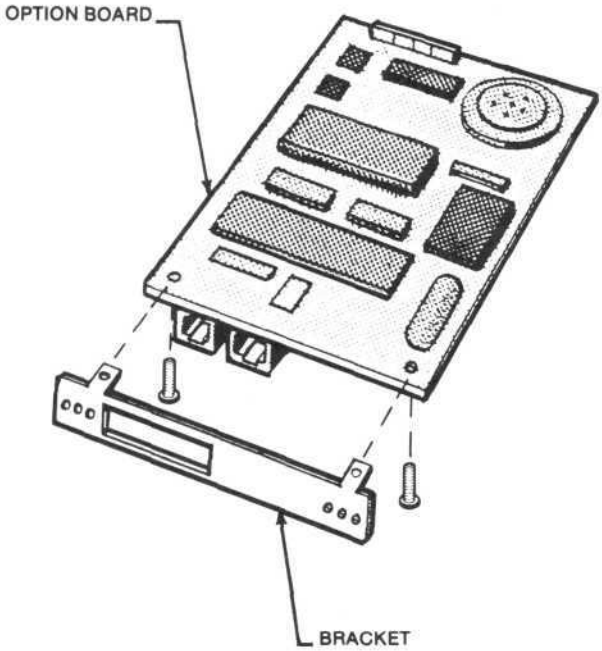

Now, carefully align the socket connector on the option board over the row of pins on the main logic board. Then, slowly lower the option board onto the connector pins, maintaining the alignment so that the pins go into the corresponding holes on the socket.

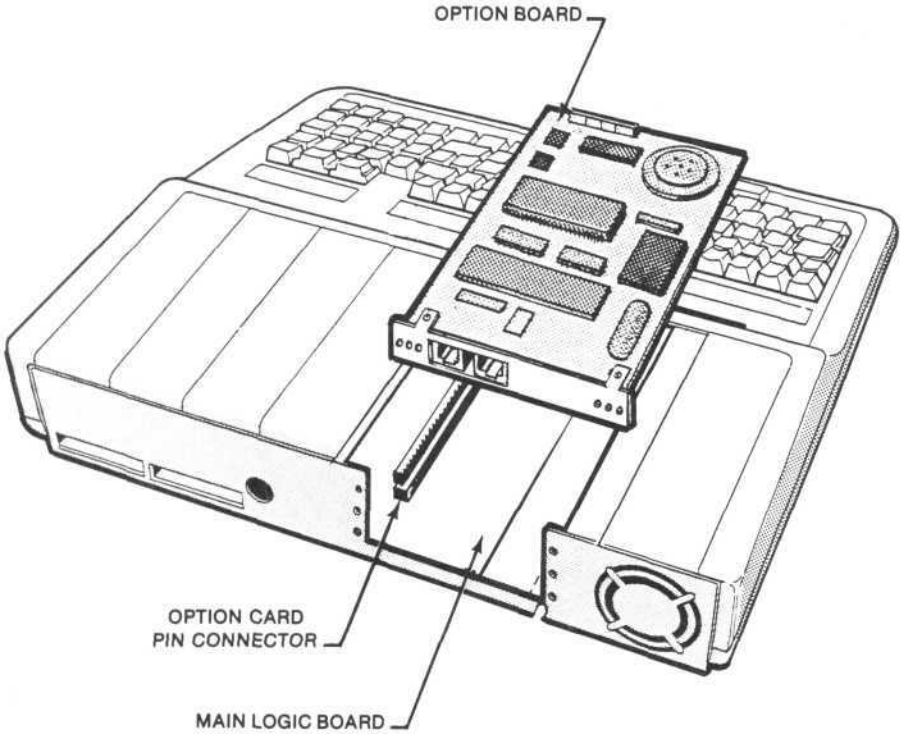

When the option board is completely seated and parallel to the main logic board, secure the bracket to the options panel area with the screws provided.

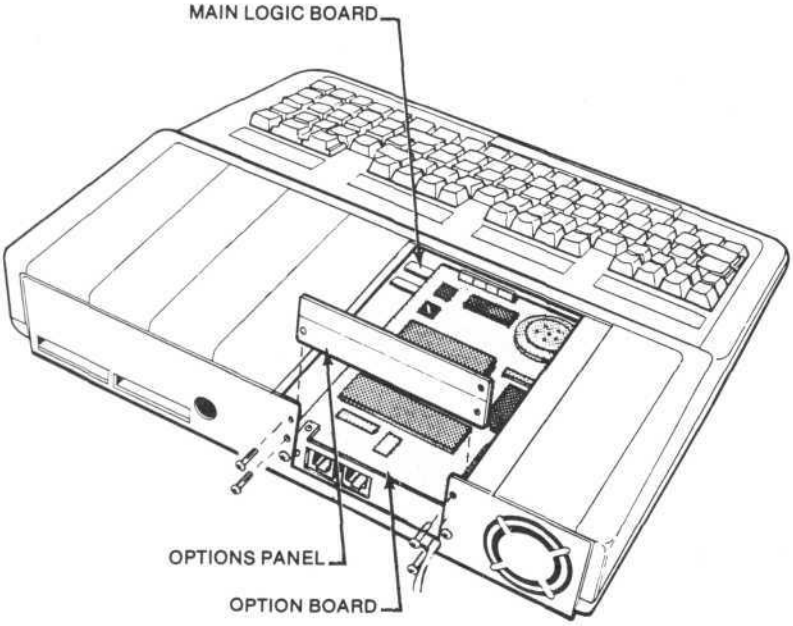

Replace the remainder of the options panel, and replace the options cover. See "Replacing the Options Panel and Cover."

Installing Additional Option Boards

After you install a Memory PLUS Expansion Adapter, you can add one or two additional option boards to it. First, install the memory board. Follow the instructions in "Installing One Option Board."

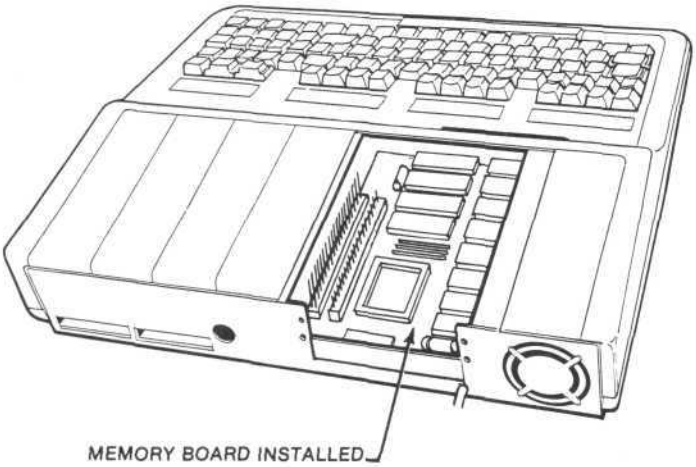

Next, install the option board on the memory board. Carefully align the socket connector on the option board over one of the sets of pins on the memory board. (Install the first board on the bottom set of pins if you are adding two option boards to the memory board.) Then, slowly lower the option board onto the pin connector, maintaining the alignment so that the pins go into the corresponding holes on the socket.

When the option board is completely seated and parallel to the memory board, secure the bracket to the options panel area with the screws provided.

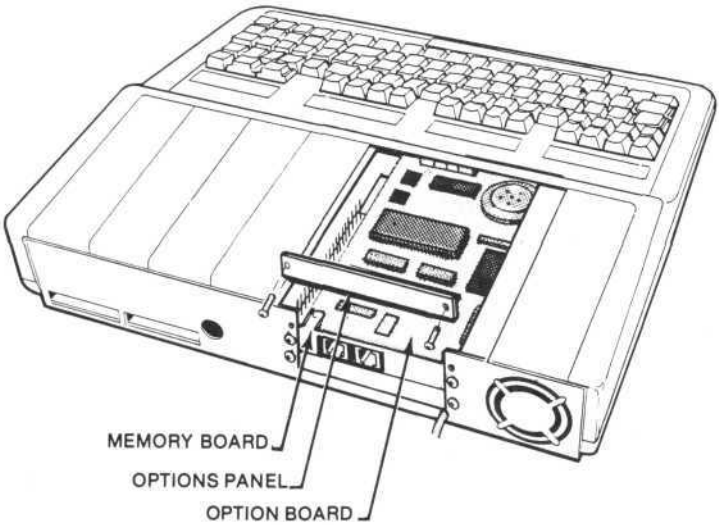

Follow these same instructions to install a second option board on the memory board.

After you install the option board(s), replace the remainder of the options panel, and replace the options cover. (See "Replacing the Options Panel and Cover.")

Adding the Smartwatch

A Smartwatch chip can be added to automatically keep track of the time and date. (Installation by Radio Shack is required.) See the following illustration for the location of the Smartwatch chip socket.

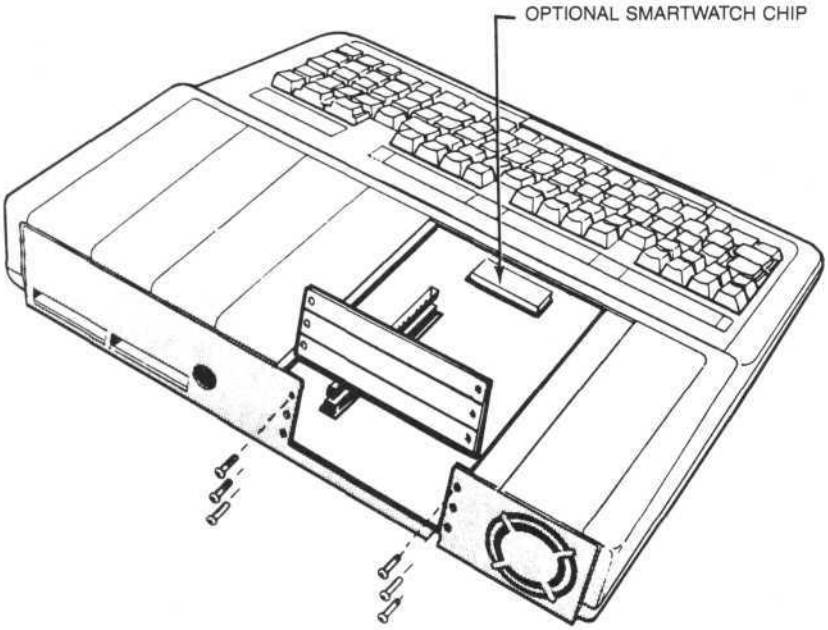
OPTIONAL SMARTWATCH CHIP

Replacing the Options Panel and Cover

The options panel has grooves dividing it into three parts. Remove any parts of the panel that are replaced by metal brackets. Replace the remaining part of the original panel.

Insert the panel into the case (with the lip down), and align the mounting holes on the panel with those on the case. Attach the panel with the screws provided.

Now, replace the options cover. Hold the cover at a downward angle with the lip on the cover toward you (at the back of the computer), and slide the cover down the tracks toward the front of the unit.

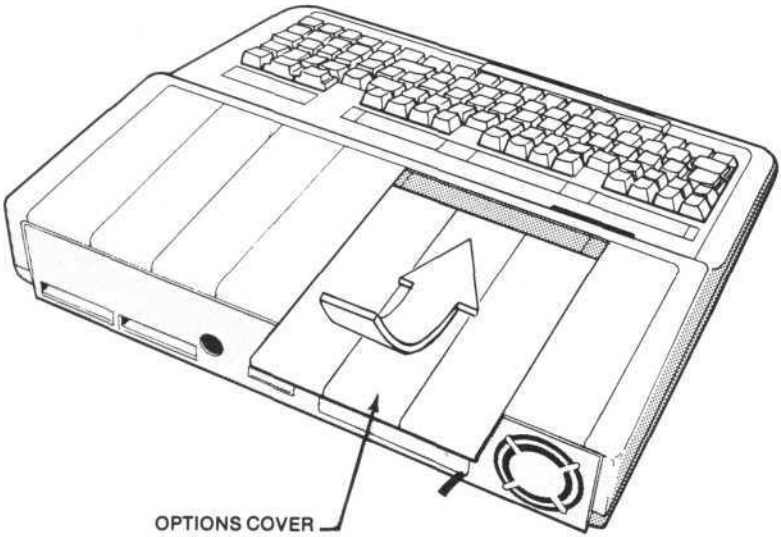

Now, connect the cables of all external options to the appropriate connectors on the back of the computer. Refer to the documentation that comes with the options for specific installation and operation instructions.

Adding an External Diskette Drive

There are two types of external diskette drives that you can use with your computer: a 5¼-Inch 360K External Disk Drive (Cat. No. 25-1060) or another 3½-Inch 720K External Disk Drive (Cat. No. 25-1061). You can install either drive by simply connecting it to the external drive connector on the back of the computer while the computer is off. The computer powers the drive. You do not need to connect the drive to an electrical outlet. Refer to the documentation that comes with the drive for operation information.

Anytime you add or remove a diskette drive, be sure to reboot your system and run the SETUPHX program to record your new configuration in the EEPROM. See "SETUP and the EEPROM" in the "MS-DOS Handbook" part of this manual for details.

> **Note:** The beam scanning circuits in the monitor can interfere with the operation of your external diskette drive. If you experience difficulties, move the drive away from the monitor.

Chapter 12

Troubleshooting

Video Problems

If you make all the proper monitor connections and still have trouble with your video, check for the following problems:

- Loose cables.
- Using color-oriented software with a monochrome monitor. Refer to "Setup and the EEPROM" in the "MS-DOS Handbook" part of this manual.

Printer Problems

If you make all the proper printer connections and still have trouble, check for the following problems:

- Loose cables.
- Cable that is plugged in upside down.
- The system is not set up for use with your printer. Refer to your printer documentation.
- The printer is not ready — off line, out of paper, out of ribbon, and so on.

Specifications

System Unit

Processor: Intel 8088, 7.16 or 4.77 megahertz

Size:

Length:	370 mm (14½ in.)
Width:	433 mm (17 in.)
Height:	83 mm (3¼ in.)

Weight: 5 kg (11 lb)

Power Requirements:

120 VAC, 60 Hz (U.S.)
120 VAC / 240 VAC, 50 Hz (International)
(28 watts)

Heat Output: 125 Btu/hr

Environment:

Air Temperature	
Operating	14°C – 30°C (55°F – 85°F)
Storage	–40°C – 72°C (–40°F – 160°F)
Humidity	
Operating	20% to 80% (non-condensing)
Storage	10% to 80% (non-condensing)

Internal Disk Drive

Unformatted Capacity	1 megabyte
Formatted Capacity	720 kilobytes
Number of Heads	2
Number of Cylinders	80
Average Access Time	93 ms (including settling time)
Track to Track	4 ms
Motor Starting Time	500 ms
Rotation Speed	300 RPM
Media	standard 3½-inch, double-sided, 80 track

PART III

MS-DOS Handbook

Chapter 14

Introducing MS-DOS

MS-DOS is a *disk operating system.* An operating system is a group of programs that acts as an interpreter and manager for your computer, monitor, and peripherals. **Disk** operating system means that the operating system can also direct and interpret information to and from disk drives. A computer can do only what you instruct it to do. The MS-DOS operating system conveys your instructions to the computer.

How much you need to know about your MS-DOS operating system depends on how you plan to use your computer. If you use your computer only for running *application programs* (software written to perform specific tasks or solve specific problems), you need to know little about the operating system. On the other hand, if you plan to use advanced operating system features or create your own programs, you need to become quite familiar with the operating system. Further, there are many MS-DOS features included specifically for use with the options available for your computer. If your computer system includes options, you should familiarize yourself with any features of MS-DOS that are specific to those options.

Regardless of how you intend to use your computer, there are several basic procedures you must know. These include:

- Preparing a diskette to store information
- Copying the operating system, program, and data files to diskette
- Duplicating a diskette

This part of the manual presents this information and a few other items you might find helpful. If you want more information, refer to the *MS-DOS Reference Manual* (Cat. No. 25-1508), which discusses the MS-DOS operating system in detail.

Entering MS-DOS Instructions

The MS-DOS instructions you give to the computer are called *commands*. You type commands at a *system prompt* (usually A>), which indicates that MS-DOS is at the *command level* (ready to accept commands).

The disk drive that MS-DOS is set up to access when you enter commands is called the *current drive*. You can access information on a drive other than the current drive by including a drive reference when you enter a command. MS-DOS regards the *primary drive* (the built-in internal drive) as the current drive unless you specify otherwise. Refer to "Changing the Current Drive" if you want to change the current drive.

Because your computer carries out the MS-DOS commands exactly as you give them, your entries must be precise and have perfect *syntax* (spelling and form). You can type your instructions to MS-DOS in either uppercase or lowercase letters. However, pay special attention when typing characters that are interchangeable on a typewriter keyboard. These characters are not interchangeable on the computer keyboard. For example, never type the letter O for 0 (zero) or the lowercase letter l for 1 (one). Be sure you type commands exactly as they are shown.

Starting the MS-DOS Diskette

1. If your computer is off, turn it on. The HX Menu appears.
2. Insert the MS-DOS diskette into Drive A (the built-in diskette drive).
3. Press [ESC] to access MS-DOS. The system prompt, A>, appears. You are now at the command level of MS-DOS.

Changing the Current Drive

The current drive is the one that MS-DOS and your application programs normally read from and write to. You can access information on a drive other than the current one by including a *drive reference* when you enter an MS-DOS command. MS-DOS regards Drive A as the current drive unless you specify otherwise.

If you have two diskette drives, you can change the current drive to Drive B by typing:

```
b: [ENTER]
```

The screen prompt changes from `A>` to `B>`. Drive B is now the current drive.

To access a diskette in a drive other than the current one, you must include the drive name. For example, assume Drive B is the current drive. To execute a program named Myprog in Drive A, type:

```
a:myprog [ENTER]
```

About Diskettes

The diskette drive in the Tandy 1000 HX uses standard, double-sided, 3½-inch, 80-track diskettes (Cat. No. 26-417 and 26-418). These diskettes can store approximately 720 kilobytes (more than 737,000 characters) of information.

Care and Handling of Diskettes

Handle diskettes carefully. To protect your diskettes and the information they contain, follow these guidelines:

- Keep diskettes away from magnetic fields (such as transformers, AC motors, magnets, TVs, and radios).
- Never lay a diskette on top of or next to the computer system's console.
- Keep diskettes out of direct sunlight and away from heat.
- Keep diskettes away from cigarette ashes, dust, and other particles. In dusty areas, use filters to clean the air in the computer room.
- Use backups rather than original diskettes whenever possible.

Write Protection for 3½-Inch Diskettes

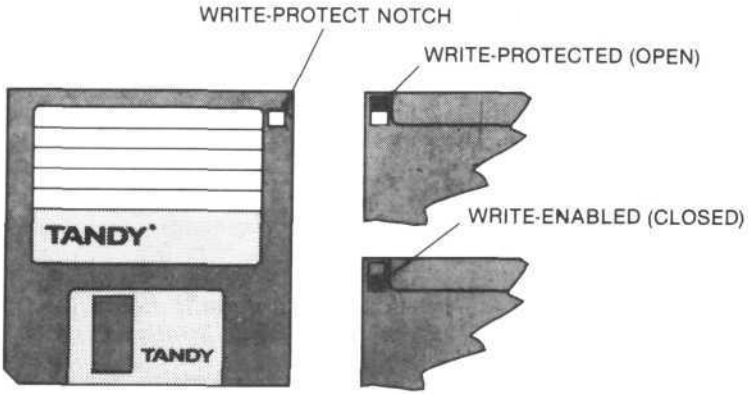

3½-inch diskettes have a small, square hole in the upper right corner. This is the write-protect notch. From the back of the diskette, move the small tab (normally red or black) up so that the hole is open to write-protect the diskette. The computer cannot write (sfore) data on a write-protected diskette. Move the tab down so that the hole is completely covered to write-enable the diskette for data storage. This feature protects diskettes from inadvertent destruction of data.

Chapter 16

Making Backups of Diskettes

The magnetically stored information on diskettes can be destroyed by exposure to magnetic fields or by improper use or handling. It is a good idea to make several *backups* (copies) of important diskettes. Should anything happen to a backup diskette, immediately make another.

> **Note:** We recommend that you make backups of your MS-DOS/BASIC and DeskMate diskettes.

There are two ways to back up important diskettes. You can use the DISKCOPY command, or you can use the FORMAT and COPY commands.

The DISKCOPY command creates an exact duplicate of a diskette. DISKCOPY duplicates all information, all files, and the entire directory structure of a diskette onto a new diskette. Use DISKCOPY whenever you want to exactly duplicate an operating system or other diskette.

> **Note:** You cannot use DISKCOPY to make a two-drive backup if the diskette drives are of different types. Use FORMAT and COPY or FORMAT and XCOPY to back up information between a diskette in a 3½-inch drive and a diskette in a 5¼-inch drive.

The FORMAT command organizes a blank diskette so that you can copy to it. Many application programs require that you format diskettes to store the information they produce. You must format a diskette before you can copy to it with the COPY command. You can also use the FORMAT command to create a bootable application diskette.

The COPY command duplicates the files in the current or specified directory and stores them on a formatted diskette. The copy is performed on a file-by-file basis. You can use COPY to back up an entire diskette or to duplicate selected files only. Use COPY to back up a diskette from one type of drive to another. The COPY command does not copy system files, hidden files, or files outside the current or specified directory.

The XCOPY command duplicates a diskette on a directory-by-directory basis. You can XCOPY an entire diskette or selected directories or files only. The diskette to which you XCOPY must be formatted. Use XCOPY to back up an operating system or application diskette from one type of drive to another.

The backup procedures use two terms you need to understand. They are *target diskette* and *source diskette.* A target diskette is the diskette you select to receive a copy of another diskette. The source diskette is the diskette that contains the programs, system files, and/or data files that you want to copy.

> **Note:** Some application programs you buy are copy-protected. You cannot make copies of these program diskettes. Check the program manual for information on protecting the data on copy-protected diskettes.

Using DISKCOPY with One Disk Drive

1. If your computer is off, turn it on, and boot MS-DOS as outlined in "Starting the MS-DOS Diskette."

2. At the system prompt, `A>`, type:

   `diskcopy` [ENTER]

3. The screen displays the following prompt:

   ```
   Insert source diskette in drive A:
   Strike any key when ready
   ```

   To back up the system diskette, leave it in Drive A. Otherwise, insert the diskette you wish to back up into Drive A. Press [ENTER].

4. The screen shows:

   ```
   Copying 2 sides, 80 tracks, 9 sectors/track
   ```

   This message can differ, according to the diskette you are copying. After a few moments, the screen shows:

   ```
   Insert target diskette in drive A:
   Strike any key when ready
   ```

   Remove the source diskette. Be sure the target diskette is not write-protected. Insert the target diskette into Drive A, and press [ENTER].

MS-DOS might request that you swap the source and target diskettes several times before DISKCOPY is complete. Swap the diskettes each time the screen messages prompt you to do so.

DISKCOPY formats the target diskette and copies the information from the source diskette to it. When the DISKCOPY procedure is complete, this message appears:

```
Copy complete
Copy another? (Y/N)?
```

5. To create more copies, press [Y], and again follow the prompts. To ensure the safety of your operating system, make at least two copies of MS-DOS.

   After you finish making copies, press [N] at the `Copy another` prompt. The DISKCOPY procedure ends, and the system prompt reappears.

6. Set aside one of the backup diskettes for daily use as your working diskette. Store the original diskette and all additional backups away from heat, magnetic sources, electric motors, and in a relatively dust-free environment.

Using DISKCOPY with Two Disk Drives

1. If your computer is off, turn it on, and boot MS-DOS as outlined in "Starting the MS-DOS Diskette."

2. At the system prompt, `A>`, type:

   ```
   diskcopy a: b: [ENTER]
   ```

3. The screen displays the following prompt:

   ```
   Insert source diskette in drive A:
   Insert target diskette in drive B:
   Strike any key when ready
   ```

   To back up the system diskette, leave it in Drive A. Otherwise, insert the diskette you wish to back up into Drive A.

   Be sure the target diskette is not write-protected. Insert the target diskette into Drive B, and press [ENTER].

4. The screen shows:

```
Copying 2 sides, 80 tracks, 9 sectors/track
```

This message can differ according to the diskette you are copying.

DISKCOPY formats the target diskette and copies the information from the source diskette to it. When the DISKCOPY procedure is complete, this message appears:

```
Copy complete
Copy another (Y/N)?
```

5. To create more copies, press [Y], and again follow the prompts. To ensure the safety of your operating system, make at least two copies of MS-DOS.

After you finish making copies, press [N] at the `Copy another` prompt. The DISKCOPY procedure ends, and the system prompt reappears.

6. Set aside one of the backup diskettes for daily use as your working diskette. Store the original diskette and all additional backups away from heat, magnetic sources, electric motors, and in a relatively dust-free environment.

Formatting with One Disk Drive

1. If your computer is off, turn it on, and boot MS-DOS as outlined in "Starting the MS-DOS Diskette."

2. At the system prompt, `A>`, type:

```
format a: [ENTER]
```

(To format the diskette so that it is bootable, type: `format a: /s` [ENTER]. The /s switch tells MS-DOS to copy the hidden system files to the diskette after it is formatted.)

3. The screen displays the following prompt:

```
Insert new diskette for drive A:
and strike any key when ready
```

Replace the system diskette in Drive A with the blank diskette you wish to format, and press [ENTER].

4. When FORMAT is complete, a prompt appears giving you the option to format another diskette. To do so, press [Y], and repeat Step 3. Otherwise, press [N].

5. Store formatted diskettes in a safe place until you are ready to use them.

Formatting with Two Disk Drives

1. If your computer is off, turn it on, and boot MS-DOS as outlined in "Starting the MS-DOS Diskette."

2. At the system prompt, `A>`, type:

   `format b:` [ENTER]

   (To format the diskette so that it is bootable, type: `format b: /s` [ENTER]. The /s switch tells MS-DOS to copy the hidden system files to the diskette after it is formatted.)

3. FORMAT asks you to insert the new (target) diskette. Insert the blank diskette you want to format into Drive B, and press [ENTER].

4. When FORMAT is complete, a prompt appears giving you the option to format another diskette. To do so, press [Y], and repeat Step 3. Otherwise, press [N].

5. Store formatted diskettes in a safe place until you are ready to use them.

Copying an Entire Diskette

Note: You must format a diskette before you can use the COPY command to copy information to it. Be sure to format with the /s switch if you are duplicating an operating system or other bootable diskette. See the previous sections on formatting.

1. If your computer is off, turn it on, and boot MS-DOS as outlined in "Starting the MS-DOS Diskette."

2. Remove the system diskette from Drive A, and replace it with the source diskette (the diskette you are copying).

3. If you have a two-drive system, insert the formatted target diskette (the diskette to which you are copying) into Drive B.

4. At the system prompt, A>, type:

```
copy a:*.* b: [ENTER]
```

5. If you have a one-drive system, the COPY command tells you when to insert the Drive A (source) diskette or the Drive B (target) diskette. When prompted to do so, remove the source diskette, and insert the formatted diskette in Drive A. Continue switching the diskettes as instructed to complete the copy.

The operating system duplicates all files on the source diskette and copies them to the target diskette.

Xcopying an Entire Diskette

Note: You must format a diskette before you can use the XCOPY command to copy information to it. Be sure to format with the /s switch if you are duplicating an operating system or other bootable diskette. See the previous sections on formatting.

1. If your computer is off, turn it on, and boot MS-DOS as outlined in "Starting the MS-DOS Diskette."

2. Remove the system diskette from Drive A, and replace it with the source diskette (the diskette you are copying).

3. If you have a two-drive system, insert the formatted target diskette (the diskette to which you are copying) into Drive B.

4. At the system prompt, A>, type:

```
xcopy a:*.* b: /s/e/w [ENTER]
```

5. If you have a one-drive system, the XCOPY command tells you when to insert the Drive A (source) diskette or the Drive B (target) diskette. When prompted to do so, remove the source diskette, and insert the formatted diskette in Drive A. Continue switching the diskettes as instructed to complete the xcopy.

The operating system duplicates all directories and files on the source diskette and copies them to the target diskette. The /s switch tells XCOPY to copy all directories and subdirectories that are not empty. The /e switch tells XCOPY to also copy empty subdirectories. The /w switch tells XCOPY to wait briefly. This wait facilitates diskette swapping.

SETUP and the EEPROM

The Tandy HX contains a special EEPROM (Electronically Erasable Programmable Read Only Memory) that stores the computer's system configuration information.

To alter the configuration information in your system, use the SETUPHX program as follows. When you finish running SETUPHX, be sure and restart your computer to change to the new configuration.

1. If your computer is off, turn it on. The HX Menu appears.
2. Insert the MS-DOS diskette into Drive A (the built-in diskette drive).
3. Press [ESC] to access MS-DOS.
4. At the system prompt, A>, type the following:

   setuphx [ENTER]

5a. *If you just added or removed a diskette drive, a screen similar to the following appears listing the new drive configuration.*

```
Diskette drives have changed:

INTERNAL DISKETTE DRIVE A TYPE                    3-1/2 INCH
INTERNAL DISKETTE DRIVE B TYPE                    3-1/2 INCH
EXTERNAL DISKETTE DRIVE TYPE                      3-1/2 INCH

DISKETTE DRIVE A DESIGNATION                      INTERNAL

Press any key to continue...
```

Press the space bar to continue to the SETUPHX menu.

5b. The SETUPHX menu displays the categories and selections available. The information currently in the EEPROM is shown in black letters highlighted in gray.

VIDEO DISPLAY	COLOR	MONOCHROME	TELEVISION
AUTOMATIC PROMPT FOR DATE AND TIME	NO	YES	
MEMORY DIAGNOSTICS ON START-UP	NO	YES	
PRIMARY START-UP DEVICE	MEMORY	DISK	
INITIAL START-UP PROGRAM	MENU	MS-DOS	DESKMATE
COMPUTER SPEED	FAST	SLOW	
NUMBER OF DISK BUFFERS (2-17)	2		
MAXIMUM # OF OPEN FILES (8-23)	10		
CHECK FOR CONFIG.SYS ON DRIVE A	NO	YES	
CHECK FOR AUTOEXEC.BAT ON DRIVE A	NO	YES	
DISKETTE DRIVE A DESIGNATION	INTERNAL	EXTERNAL	
MS-DOS COUNTRY CODE	US UK FR GR JPN		
START-UP MENU LANGUAGE	ENGLISH FRENCH DUTCH GERMAN SPANISH		
TYPE OF KEYBOARD	US UK CF FR GR IT SP		
TYPE OF ELECTRICAL POWER	60 HERTZ 50 HERTZ		

Use ↑ and ↓ to move, ← and → to change, ESC to quit, or F1 to update EEPROM

Use the up and down arrow keys to move to the category you wish to change.

Use the left and right arrow keys to move the highlight to the selection you want.

To change the NUMBER OF DISK BUFFERS or the MAXIMUM # OF OPEN FILES, move to the current number. Then, use the left and right arrows to increase or decrease the numbers. For example, to change the NUMBER OF DISK BUFFERS from the default of 2 to 3, move to the number 2. Then press [→] once. The number increases to 3.

6. To save your new changes and/or your new diskette drive configuration to the EEPROM, press [F1]. An `EEPROM updated` message appears followed by the system prompt.

   To exit the program without saving any changes to the EEPROM, press [ESC]. One of the following messages appears followed by the system prompt.

   `EEPROM not updated.`

If you changed your drive configuration, but did not save it to the EEPROM by pressing [F1], you see the following:

```
EEPROM not updated
Diskette drive configuration not updated.
```

Following are the SETUPHX menu items, accompanied by the possible selections. The defaults are shown in boldface type.

VIDEO DISPLAY
Specify the type of video display you have.

Color
Monochrome
Television

AUTOMATIC PROMPT FOR DATE AND TIME
Specify if you want the date and time prompt to appear during startup.

No
(The computer does not ask you for the date and time, but defaults to January 1, 1980 unless you installed the Smartwatch option.)

Yes
(You are asked to enter the date and time whenever you boot the system.)

MEMORY DIAGNOSTICS ON START-UP
Specify if you want your computer to run a memory check on startup. A memory check verifies whether all the memory is working properly.

No
Yes

PRIMARY START-UP DEVICE
Specify the device from which the system is to boot.

Memory
Disk

During startup, the HX first tries to boot from the internal ROM DOS.

If you change to booting from disk, the computer first tries to boot from a diskette in Drive A. If this disk is not available, it boots from the internal ROM DOS. If you have a non-bootable diskette in Drive A, the screen displays an error message.

INITIAL START-UP PROGRAM
Select the initial operation of your computer after startup.

MENU
The computer automatically displays the HX Menu.

MS-DOS
The screen displays the A> prompt and waits for you to type a command.

DESKMATE
The computer automatically runs the DeskMate program.

COMPUTER SPEED
Select the computer's initial speed.

Fast
(7.16 megahertz)

Slow
(4.77 megahertz)

NUMBER OF DISK BUFFERS
Press [←] and [→] to change the maximum number of disk buffers your system can open, in the range of 2 to 17. The default is 2.

This parameter only has effect if your computer boots from internal ROM. If it boots from diskette, it looks for a BUFFERS= entry in the Config.sys file.

MAXIMUM # OF OPEN FILES
Press [←] and [→] to change the maximum number of files your system can open at one time, in the range of 8 to 23. The default is 10.

This parameter has effect only if your computer boots from internal ROM. If it boots from diskette, it looks for a FILES= entry in the Config.sys file.

CHECK FOR CONFIG.SYS ON DRIVE A
Specify whether or not your system is to use the Config.sys file on Drive A during startup.

No
(Tells the computer not to use the Config.sys file from Drive A.)

Yes
(Tells the computer to use the Config.sys from Drive A. If none exists, the computer sets FILES and BUFFERS to the values contained in the EEPROM.)

CHECK FOR AUTOEXEC.BAT ON DRIVE A
Specify whether your computer is to execute the commands in the Autoexec.bat file on Drive A during startup.

No
(Tells the computer not to execute Autoexec.bat from Drive A.)

Yes
(Tells the computer to execute the Autoexec.bat file from Drive A. If none exists, the computer uses the Autoexec.bat file in the ROM.)

DISKETTE DRIVE DESIGNATION
Select the drive from which your computer is to boot.

Internal
(The computer boots from the built-in Drive A.)

External
(The computer boots from your external drive. If you select External, your external drive is now Drive A, and your built-in drive is now Drive B. If you have two internal drives and an external drive, your external drive is now Drive A, and your built-in drive is now Drive C.)

MS-DOS COUNTRY CODE
Specify the country format of certain system functions, such as the currency symbol and the time and date display.

US =	United States	mm-dd-yy hh:mm
UK =	United Kingdom	dd-mm-yy hh:mm
FR =	France	dd/mm/yy hh:mm
GR =	Germany	dd.mm.yy hh.mm
JPN =	Japan	yy-mm-dd hh:mm

START-UP MENU LANGUAGE
Specify the language for the startup menu.

English
French
Dutch
German
Spanish

TYPE OF KEYBOARD
Specify the country format of the installed keyboard.

US = United States
UK = United Kingdom
CF = Canada-French
FR = France
GR = Germany
IT = Italy
SP = Spain

TYPE OF ELECTRICAL POWER
Specify the type of your electrical power supply. The United States, Canada, and Mexico use 60 Hz power. Australia, Europe, and Japan use 50 Hz power.

60 HERTZ
50 HERTZ

INDEX

/e switch C12
/s switch C10, C11
/w switch C12

256K Parity Memory Kit B15, B18

A> prompt *See* system prompt
Alt key B2
ansi.sys file B14
application programs C1
    starting B13-14
arrow keys A10, B3, B11, B13, C14
autoexec.bat file B14, C17

B> prompt *See* system prompt
bootable diskette B13, C7, C12
    formatting to make a C10, C11
Break key B4

Caps key B2
caps lock mode B2
card edge connector A7
CM-5 RGBI Color Monitor A2
CM-11 RGBI Color Monitor A2
computer speed C16
config.sys file B14, C16, C17
COPY command C7, C11-12
copy-protected programs C8
Ctrl key B2
current drive *See* diskette drive
cursor movement keys *See* arrow keys

date and time B15
    changing B11
    prompt during startup C15
Delete key B4
disk buffers C14, C16
DISKCOPY command C7, C8-10
    with one drive C8-9
    with two drives C9-10

diskette
- care C5
- duplicating C7-12
- formatting C7
- inserting into drive A11, B7, B13
- MS-DOS *See* MS-DOS
- Personal DeskMate *See* Personal DeskMate
- removing from drive B7
- source C8, C9, C10, C11, C12
- storage C9, C10, C11
- target C8, C9, C10, C11, C12
- working C9, C10
- write-protecting C6

diskette drive A3, B7
- adding B12, B27
- current C2, C3
- designation during startup C17
- external B12, B15, B27, C17
- internal B11, C5, C17
- primary B7, B11, C2
- release A3
- secondary B7
- specification B32
- types of B27

drive activity light A3, A13, B7
drive configuration list in setuphx C13
drive reference C2, C3

earphone
- jack A3, B9
- using B9

EEPROM C13-18
electrical interference A6, B27
End key B4
Enter key B2, B3, B5, B11, B13
Esc key B2, B11, C2, C13, C14
expansion options available B15
external disk drive connector A3, B27
external options B25

F1 key B11, C14
F2 key B11
F3 key B11, B12
F4 key B11, B13
F12 key B12

features of computer A1
files
    duplicating with COPY command C7
    maximum number of open C14, C17
FORMAT command C7, C10-11
    with one drive C10-11
    with two drives C11
function keys A10, B1

headphones B9
Hold key B2
Home key B3
HX Menu A10, B11-12, B13, C2, C16
    exiting B11
    returning to B12

initial startup program C16
Insert key B4
internal modem board B16
internal options A4
    installing B17-25
internal ROM DOS C16, C17

joystick B15
    connecting A8
    connectors A3, A8
    reversing A8

keyboard B1-5
    country format of C18

local area network B16

main logic board B15, B16, B17, B18, B20
main menu *See* HX Menu
memory board B15
memory diagnostics during startup C15
Memory PLUS Expansion Adapter B15, B16, B18, B19, B22
modems B16
monitor A2
    color A2, A4, C15
    connecting A3-5
    connector A4
    monochrome A2, A5, C15

MS-DOS B13
accessing B11, C13
basic procedures C1
command level C2
commands C2
country code C18
diskette B11, C2, C7, C8, C9, C10, C11, C12, C13
entering a command in B12

network *See* local area network
Num Lock key B3
number lock mode B3
numeric keypad B1, B3-5

operating temperatures B31
option board B16
installing on the memory board B22-23
metal connector bracket on B19
socket connector on B20, B22
option card pin connector B18, B20, B22
options
executing B11
external B15-16
internal A4, B15-16, B17-25
options cover A3, B17
removing B17
replacing after board installation B21, B23, B25
options panel A3, B17, B18
removing B18
replacing after board installation B21, B23, B25

Personal DeskMate B16
diskette A11, B11, B13, C7
running A11, B11, C16
Pg Dn key B5
Pg Up key B4
PLUS 300-Baud Modem B16
PLUS 1200-Baud Modem B16
PLUS Network 4 Interface B16
PLUS RS-232C Upgrade Board B15
power indicator light A9
power requirements B31, C18
power switch A9, A13
primary drive *See* diskette drive
primary startup device C16

printer
    cable A7, B15
    connecting A7
    connector A7
    parallel B15
    problems B29
    serial B15
problem solutions B29

re-boot the computer B11, B13

screen print function B3
secondary drive *See* diskette drive
serial mouse B15
SETUPHX program B14, B27
    exiting C14-15
    Menu C13-14
    starting C-13
    using C13-18
Shift Print function B3
Smartwatch B23, C15
Smartwatch Chip Kit B15
    adding B23-24
socket connector *See* option board
source diskette *See* diskette
space bar B12, C13
specifications B31-32
startup menu language C18
storage temperatures B31
system configuration information C13-18
system diskette *See* diskette
system prompt B12, B13, C2, C9, C10, C11, C12, C13, C16

target diskette *See* diskette
television as a monitor C15
typewriter keys B1-3
typing MS-DOS commands C2

video connector A5
video display terminal C15
video problems B29
view programs
    in a drive B13
    on Drive A B11, B12
    on Drive B B12
    on Drive C B12

VM-4 Monochrome Monitor A2
volume control A3, B9

working diskette *See* diskette

XCOPY command C7, C8, C12

RADIO SHACK
A Division of Tandy Corporation
Fort Worth, Texas 76102

7/87-MP 874-8011 Printed in U.S.A.