TANDY 1000 HD (25-1000A) Layout Faxback Doc. # 1275

Note: Refer to Faxback Doc. # 1269 for setting this board.

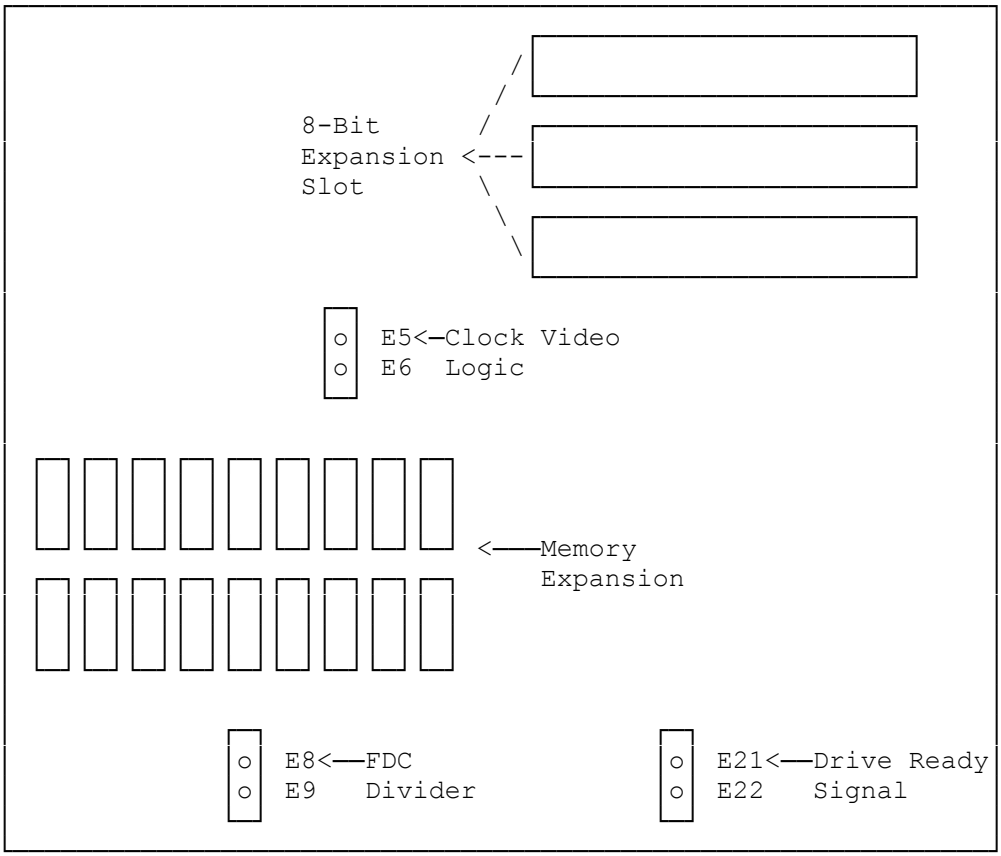

E5-E6	Connects Clock to video logic
E8-E9	Connects 8MHz clock to FDC clock divider
E21-E22	Selects active drive ready signal constantly